Ned. Ver. v. Historie v/d Radio

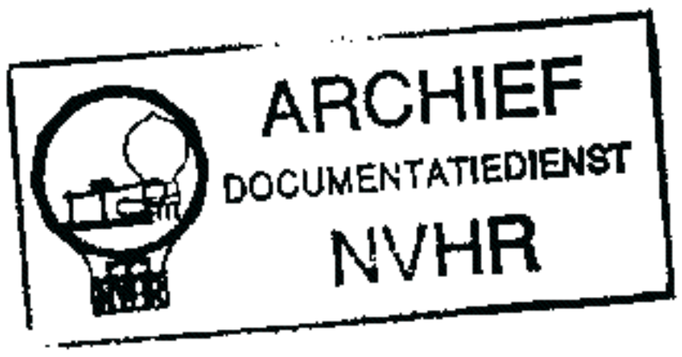

HST-39

AEP Model
E Model

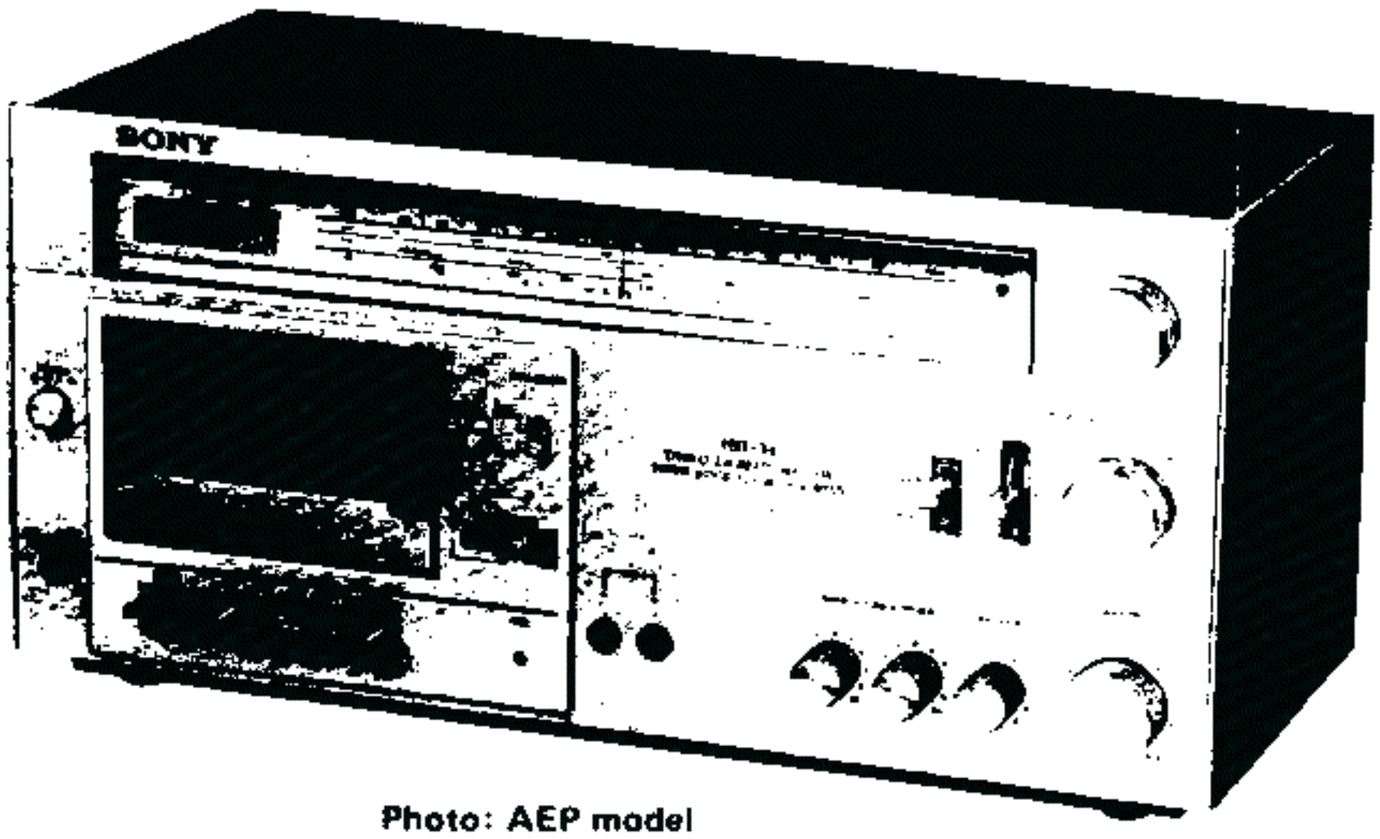

Photo: AEP model

STEREO CASSETTE-RECEIVER

SPECIFICATIONS

GENERAL

System: Superheterodyne FM/AM tuner, Complementary symmetry power amplifier circuit (SEPP OTL, OCL)

Power Requirements: 220 V ac, 50 Hz (AEP model)
110–120 or 220–240 V ac adjustable, 50/60 Hz (E model)

Power Consumption: 85 W

Dimensions: Approx. 456 (w) x 225 (h) x 247 (d) mm
18 (w) x 8 7/8 (h) x 9 3/4 (d) inches
Including projecting parts and controls

Weight: Approx. 6.35 kg, 14 lb (net)
7.7 kg, 17 lb (in shipping carton)

FM SECTION

Tuning Range: 87.5–108 MHz

Antenna: 300 Ω balanced
75 Ω unbalanced

Usable Sensitivity: 12 dBf, 2.2 μV, S/N = 30 dB

Harmonic Distortion: 0.5% (MONO), 1.0% (STEREO) at 400 Hz

Selectivity: 50 dB

S/N Ratio: 65 dB

Frequency Response: 70 Hz – 12.5 kHz ± 3 dB

Saparation: Better than 35 dB

0 dB = 0.775 V

– Continued on page 2 –

SAFETY-RELATED COMPONENT WARNING !!

COMPONENTS IDENTIFIED BY SHADING AND MARK ! ON THE SCHEMATIC DIAGRAMS, EXPLODED VIEWS AND IN THE PARTS LIST ARE CRITICAL TO SAFE OPERATION. REPLACE THESE COMPONENTS WITH SONY PARTS WHOSE PART NUMBERS APPEAR AS SHOWN IN THIS MANUAL OR IN SUPPLEMENTS PUBLISHED BY SONY

SONY®
SERVICE MANUAL

AM SECTION

AEP model

Band	SW	MW	LW
Tuning Range	5.8–15.8 MHz (49 · 19 m)	530–1, 605 kHz	150–350 kHz
Antenna	External antenna terminal	Built-in ferrite-rod antenna and external antenna terminal	
Sensitivity	30 μV, external antenna (S/N = 20 dB)	50 dB/m, built-in antenna 100 μV, external antenna (S/N = 20 dB)	52 dB/m, built-in antenna 150 μV, external antenna
S/N Ratio	50 dB		
Harmonic Distortion	0.8 % at 400 Hz		
Intermediate Frequency	468 kHz		

E model

Band	SW1	SW2	MW
Tuning Range	2.3–6.2 MHz (120–49 m)	7–17.9 MHz (41–16 m)	530–1,605 kHz
Antenna	External antenna terminal		Built-in ferrite-rod antenna and external antenna terminal
Sensitivity	30 μV, external antenna (S/N = 20 dB)		50 dB/m, built-in antenna 100 μV, external antenna
S/N Ratio	50 dB		
Harmonic Distortion	0.8 % at 400 Hz		
Intermediate Frequency	468 kHz		

AMPLIFIER SECTION

Continuous RMS Power Output: 12 + 12 W (8 Ω) at 90 Hz –15 kHz
(less than 5% THD, both channels driven simultaneously)

Music Power: 35 W (8 Ω)

Inputs:

	sensitivity	impedance	S/N
PHONO (phono jacks)	3.5 mV	47 kΩ	65 dB
AUX (phono jacks)	500 mV	47 kΩ	70 dB
MIC (phono jacks)	3.5 mV	600 Ω	60 dB

Outputs:

REC OUT (phono jacks)	output voltage 250 mV	impedance 10 kΩ
HEADPHONES	Accepts headphones of 8 Ω or more	
SPEAKERS	Accepts speakers of 8 Ω	

Frequency Response: PHONO: RIAA curve ±2 dB
AUX: 30 Hz – 30 kHz ±2 dB
MIC: 100 Hz – 10 kHz ±2 dB

Tone Controls: BASS: ±10 dB at 100 Hz
TREBLE: ±10 dB at 10 kHz

Loudness Control (att. 30 dB): +6 dB at 100 Hz
+3 dB at 10 kHz

CASSETTE RECORDER SECTION

Recording System: 4-track 2-channel stereo

Frequency Response: 50 Hz –12 kHz (with the TAPE SELECT switch set to CrO_2)

S/N Ratio: 50 dB

Wow and Flutter: 0.18 % WRMS

MODEL IDENTIFICATION

– Rear Board –

AEP model

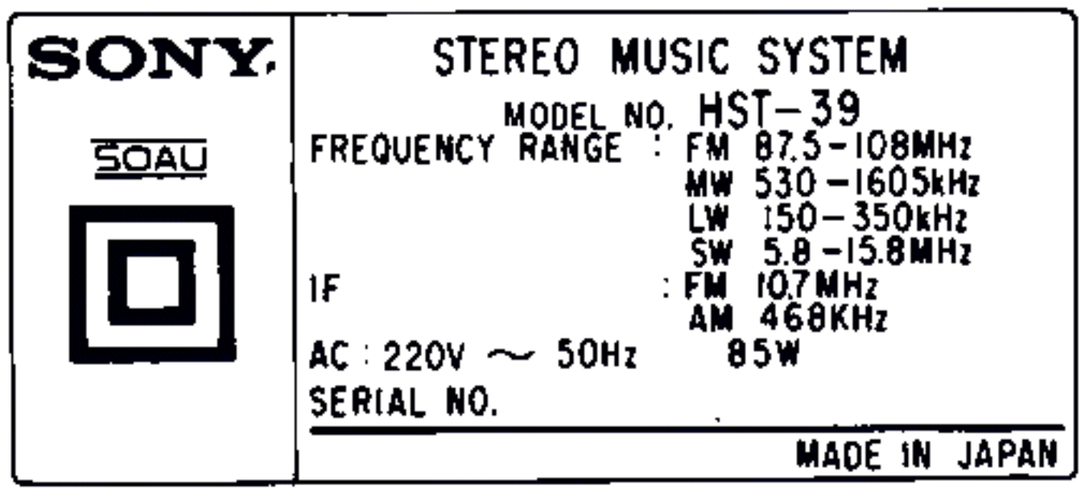

E model

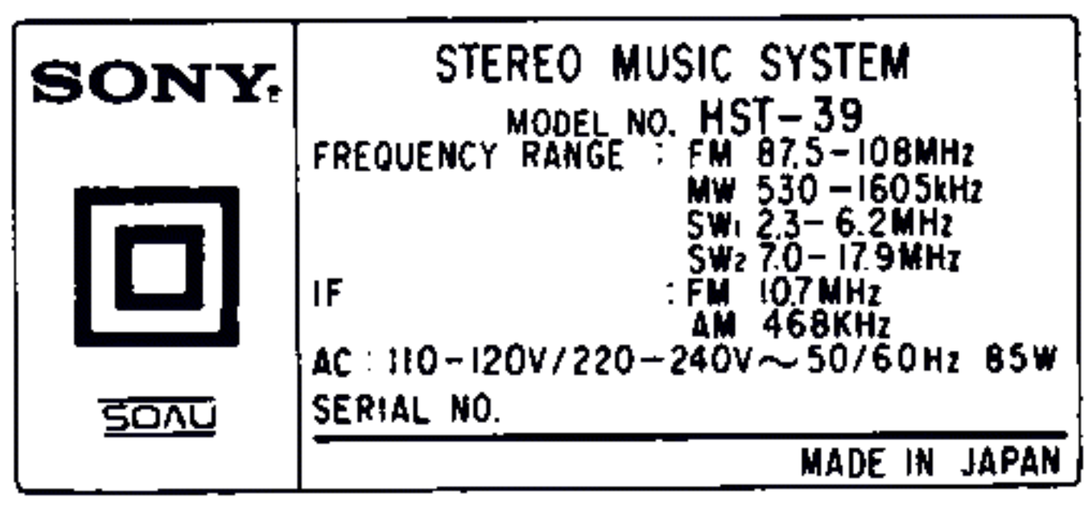

SECTION 1
OUTLINE

1-1. BLOCK DIAGRAM

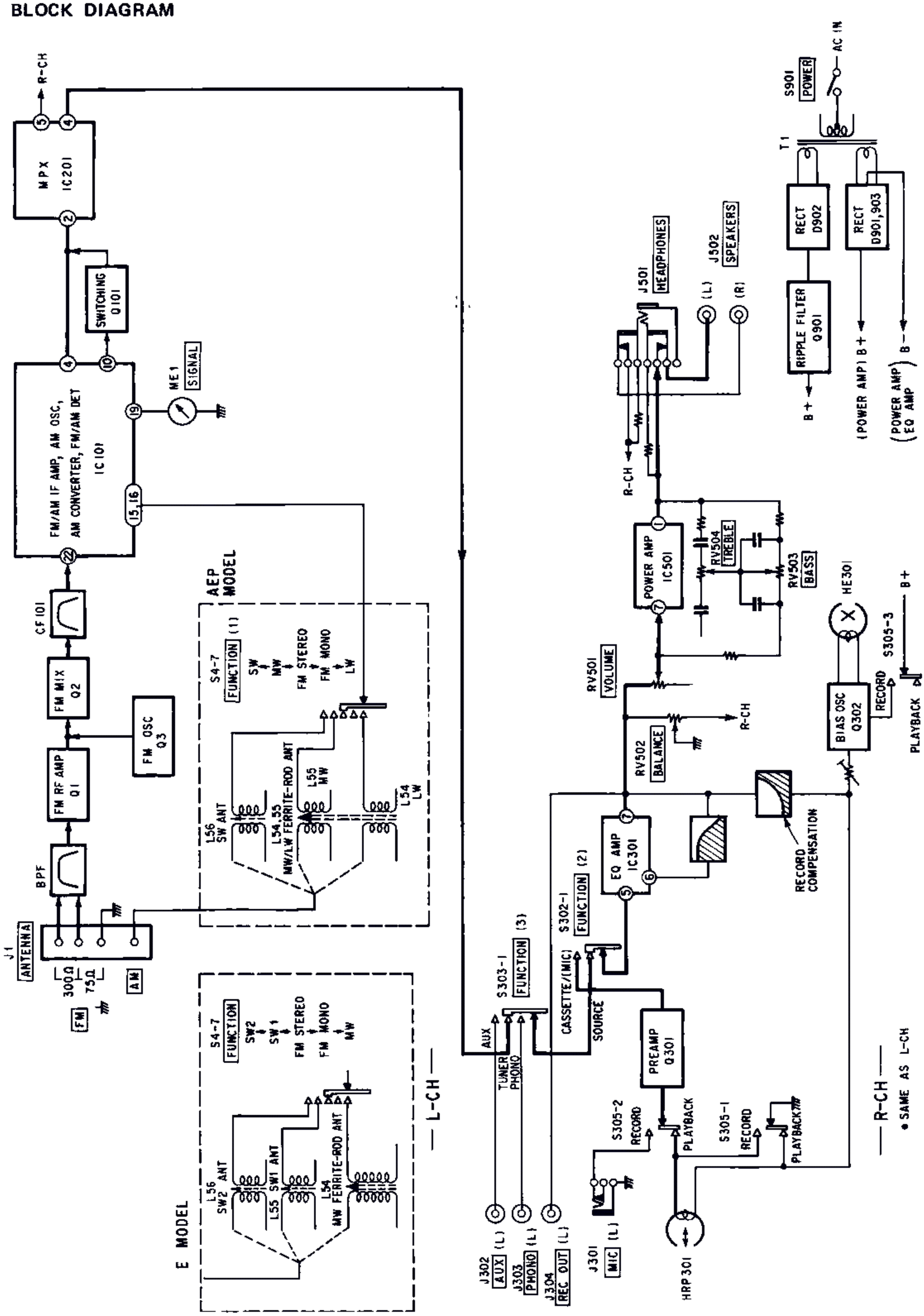

SECTION 2

DISASSEMBLY

- Follow the disassembly procedure in the numerical order given.

Remove the case.
BTP 4 x 25 (four screws)

Remove the rear board.
PTPWH 3 x 8 (one screw)

MAIN BOARD REMOVAL

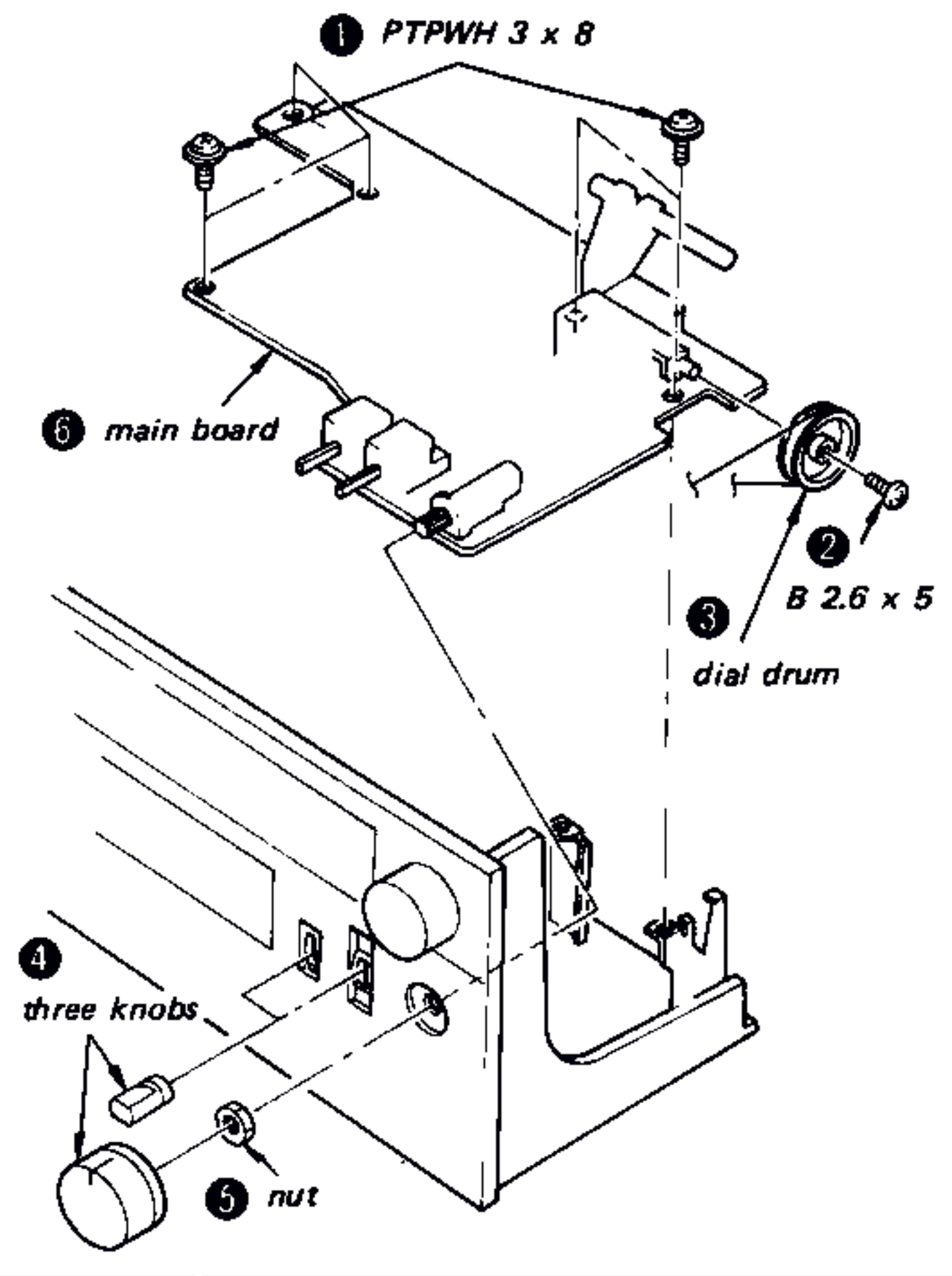

Remove the power amp board.

MECHANISM SECTION REMOVAL

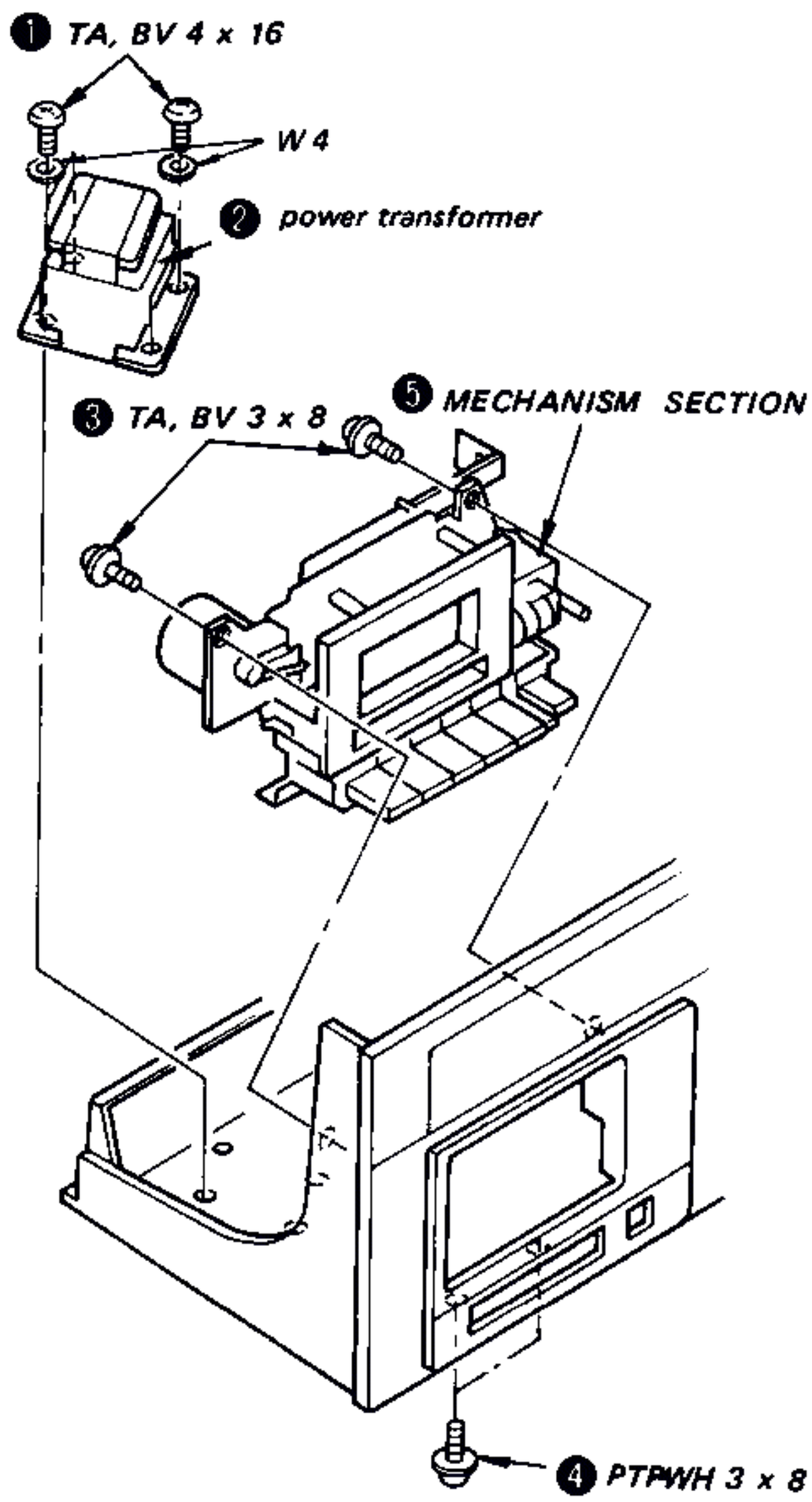

Remove the cassette deck cover.
TPP 2.6 x 10 (two screws)

REEL SPINDLE REMOVAL

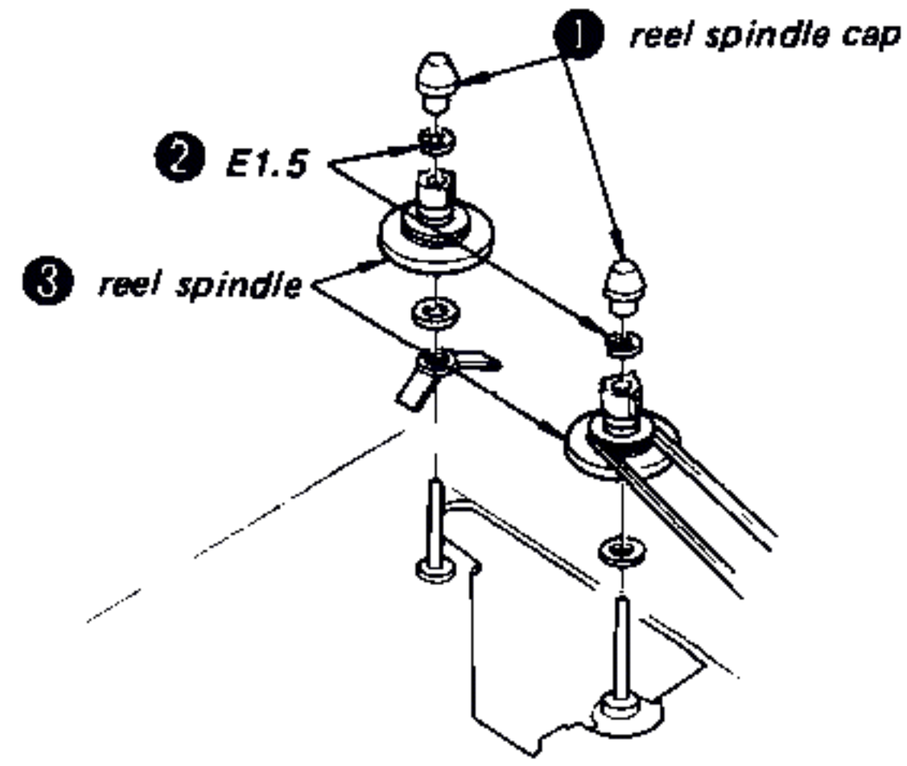

CASSETTE HOLDER REMOVAL

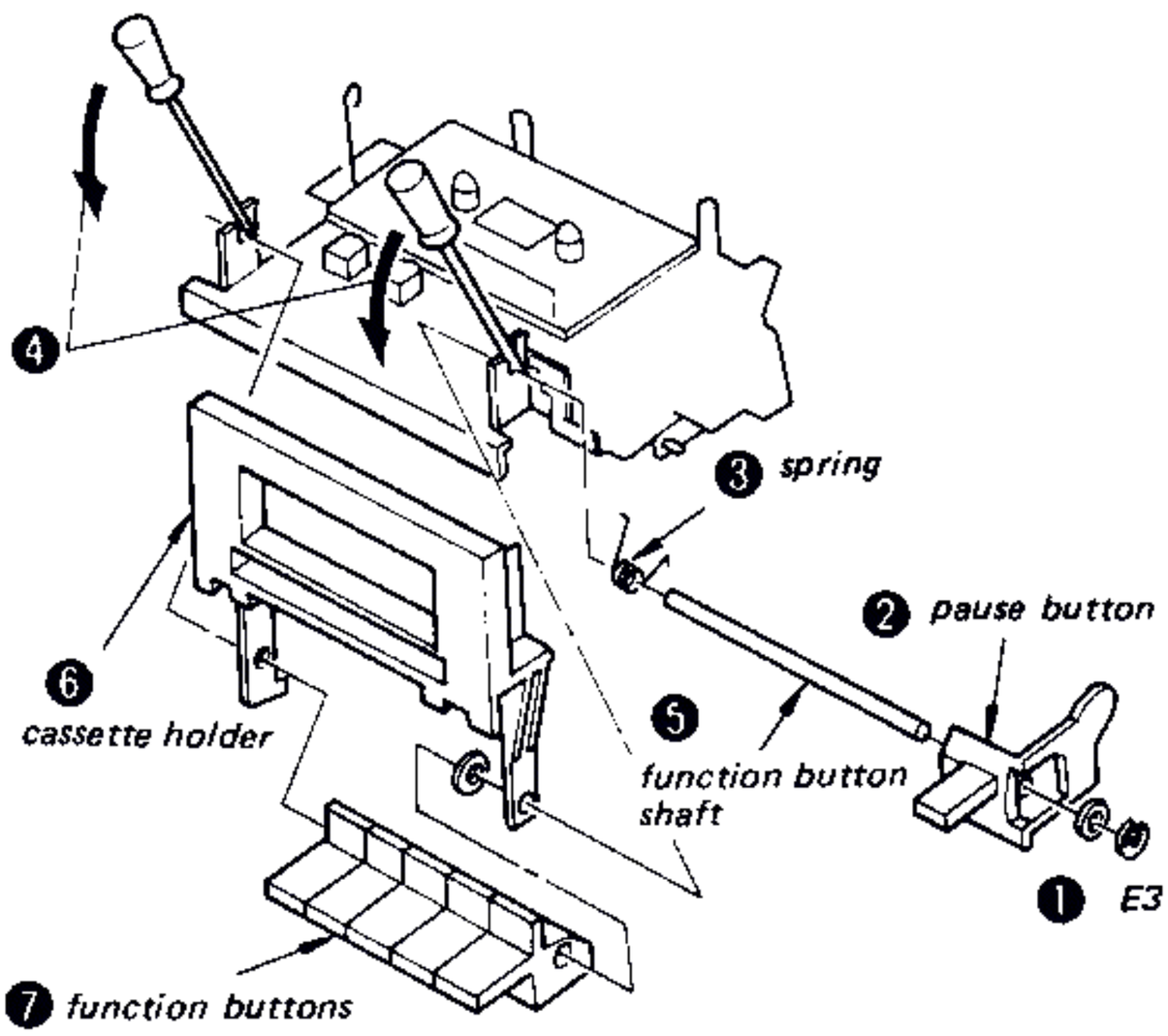

FLYWHEEL REMOVAL

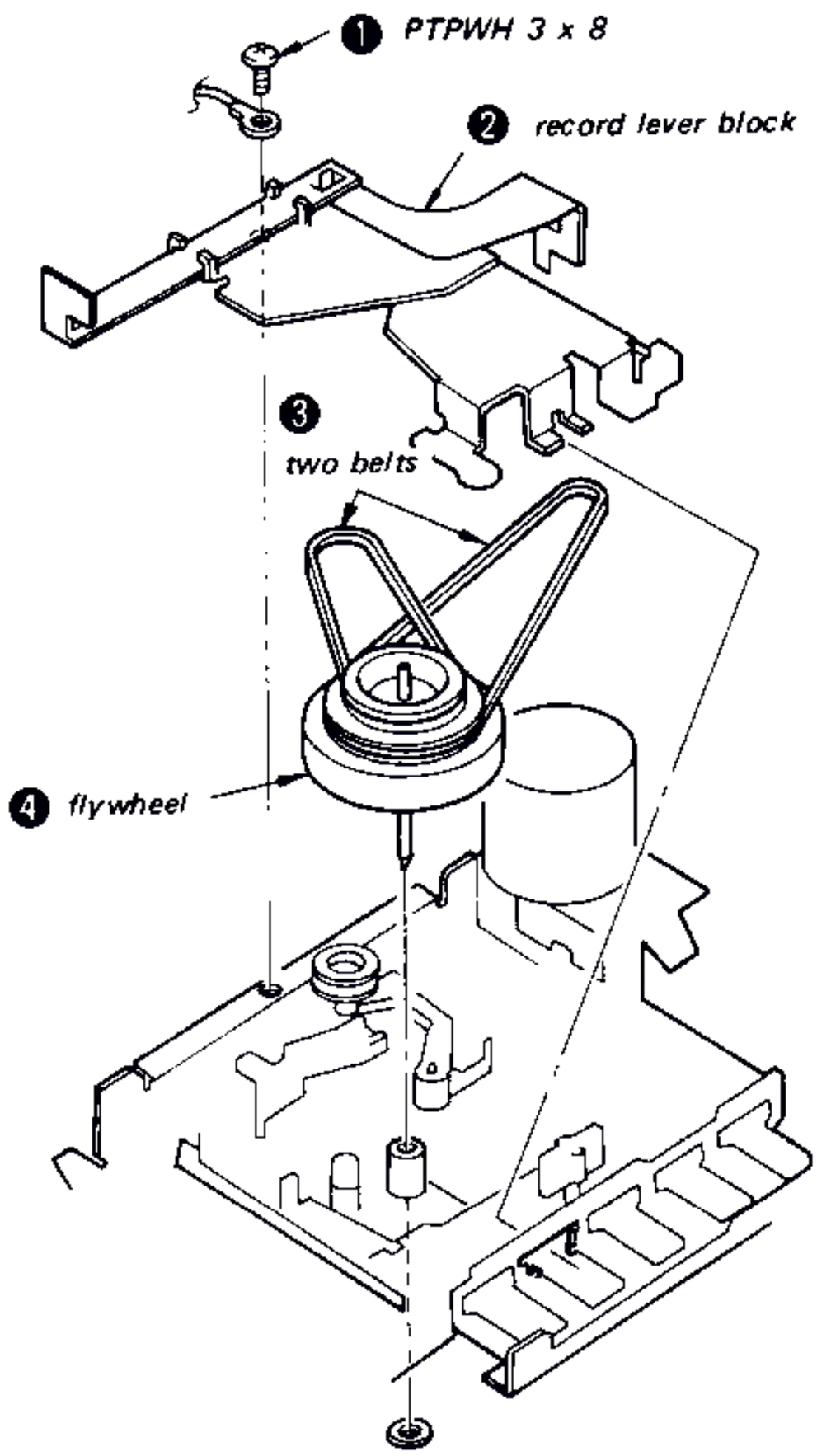

PINCH ROLLER REMOVAL

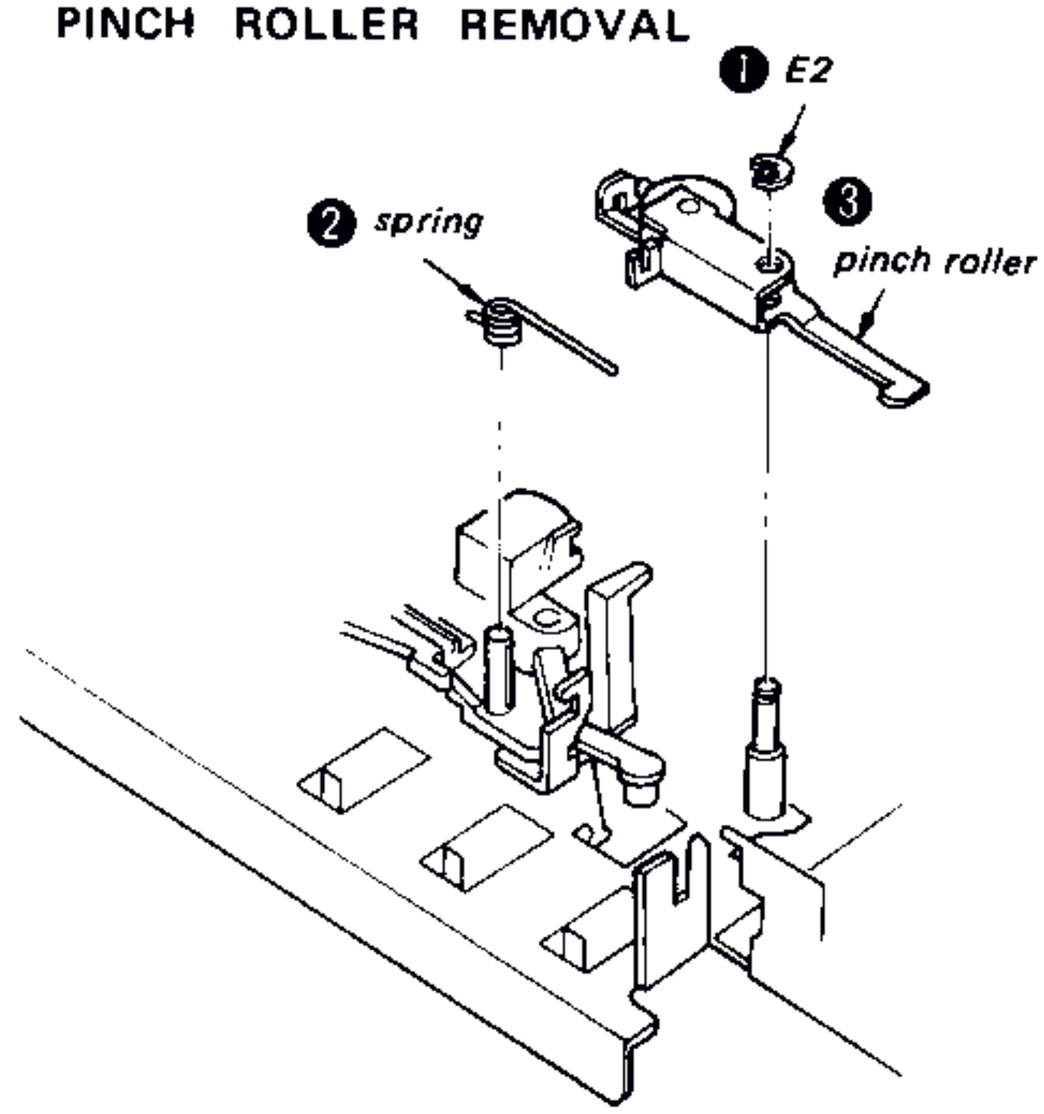

DIAL CORD STRINGING

1. Preparation

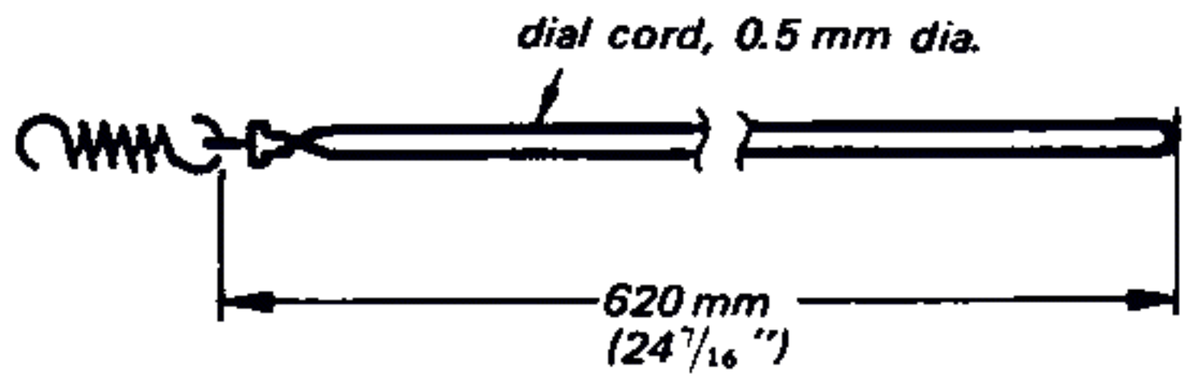

2. Stringing

- *Turn the tuning-capacitor shaft fully clockwise and set the tuning drum so that the cutout is positioned as shown below.*

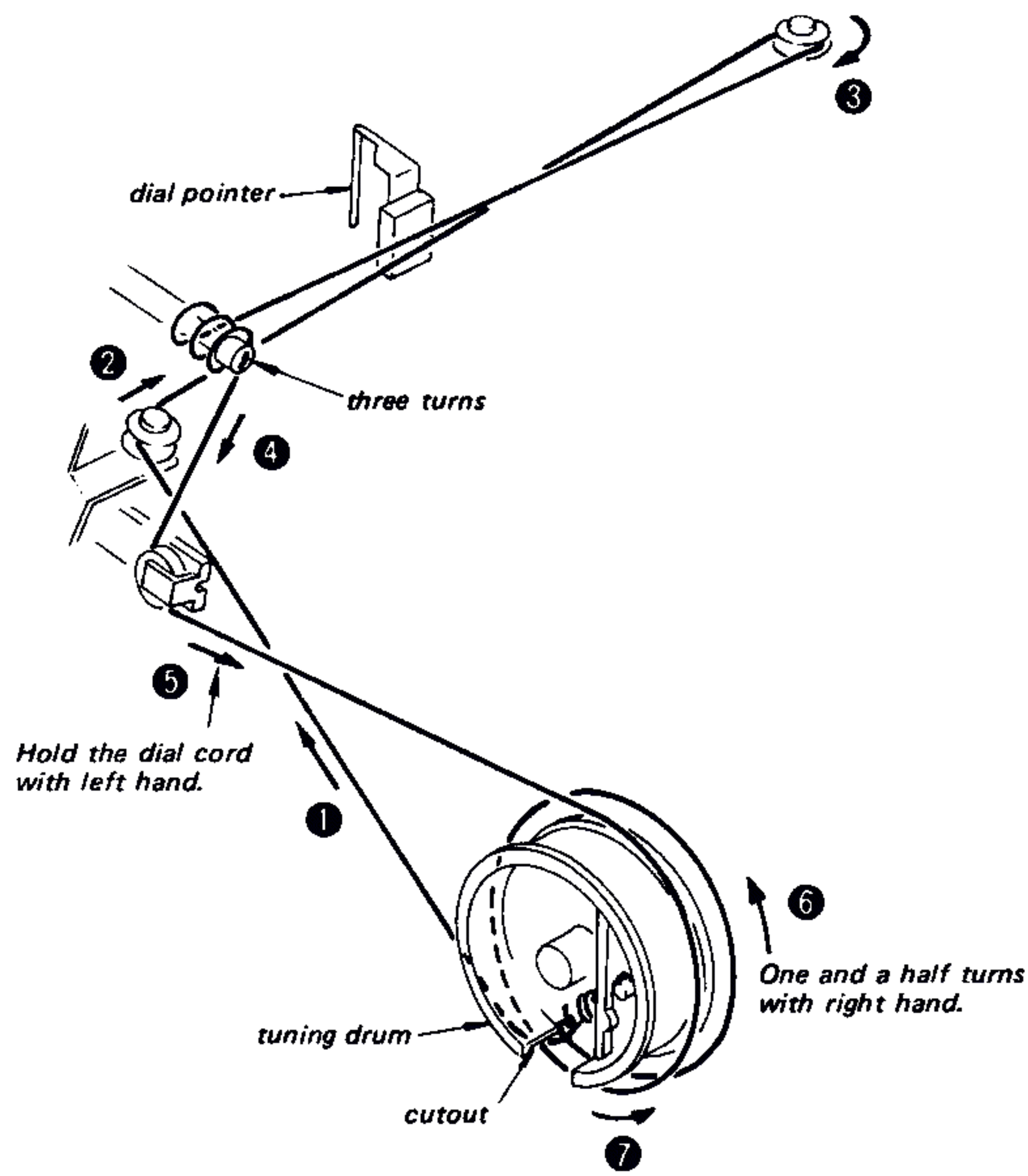

3. Dial Pointer Setting

Receive a broadcasting station and set the dial pointer to the frequency of the station on the dial scale.

SECTION 3
ADJUSTMENTS

3-1. MECHANICAL ADJUSTMENT

PRECAUTION

1. Clean the following parts with a denatured-alcohol-moistened swab:

   record/playback head — pinch roller
   erase head — rubber belts
   capstan — idlers

2. Demagnetize the record/playback head with a head demagnetizer.
3. Do not use a magnetized screwdriver for the adjustments.
4. After the adjustments, apply a suitable locking compound to the parts adjusted.
5. The adjustments should be performed with the rated power supply voltage unless otherwise noted.

Torque Adjustment

	Torque meter	Meter reading
Forward	CQ-101A, 102A, 103A	25 – 60 g·cm (0.35 – 0.84 oz·inch)
Fast Forward Rewind	CQ-201A	60 – 110 g·cm (0.84 – 1.53 oz·inch)

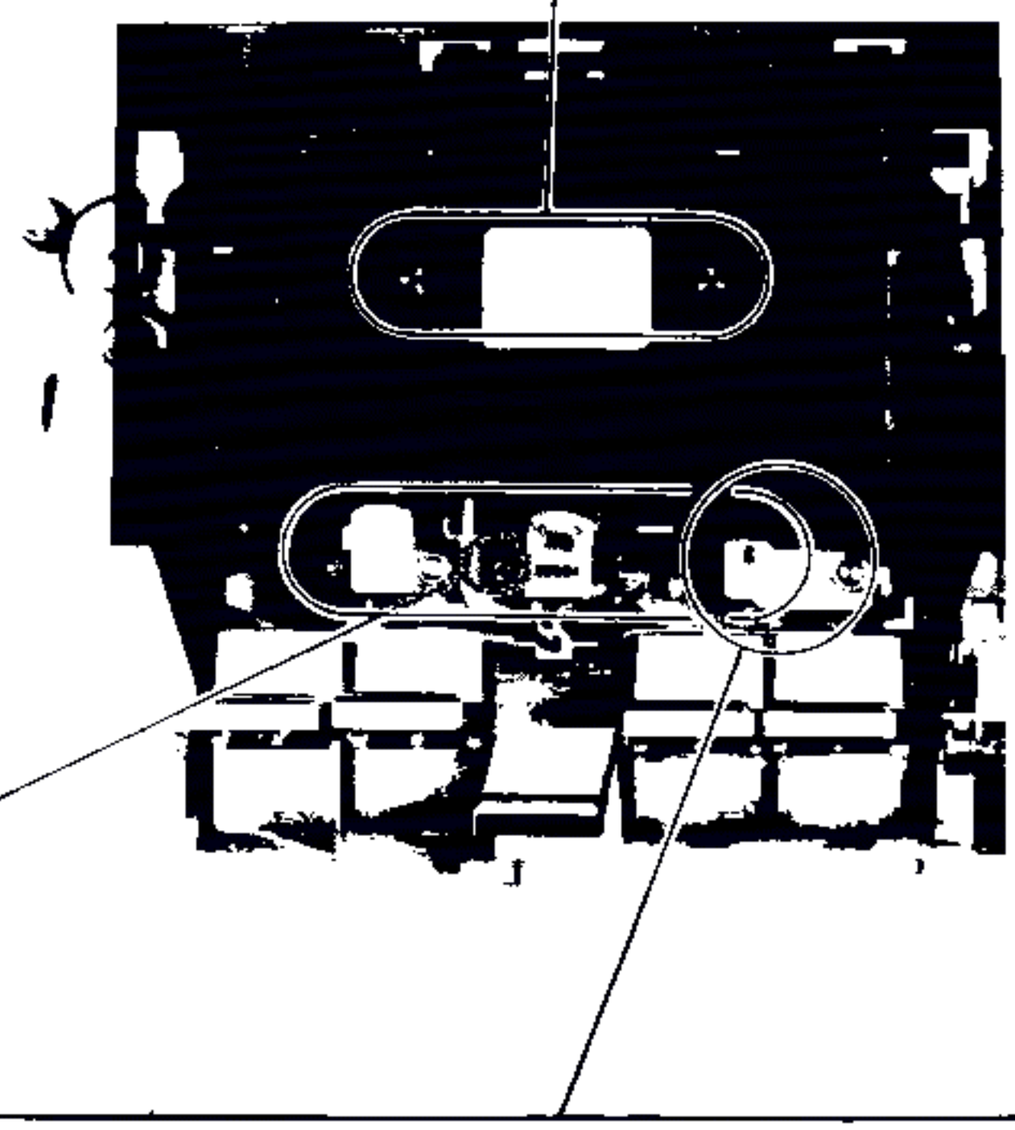

Head Height Adjustment

– Playback Mode –

1. Prepare an adjustment cassette as shown below.

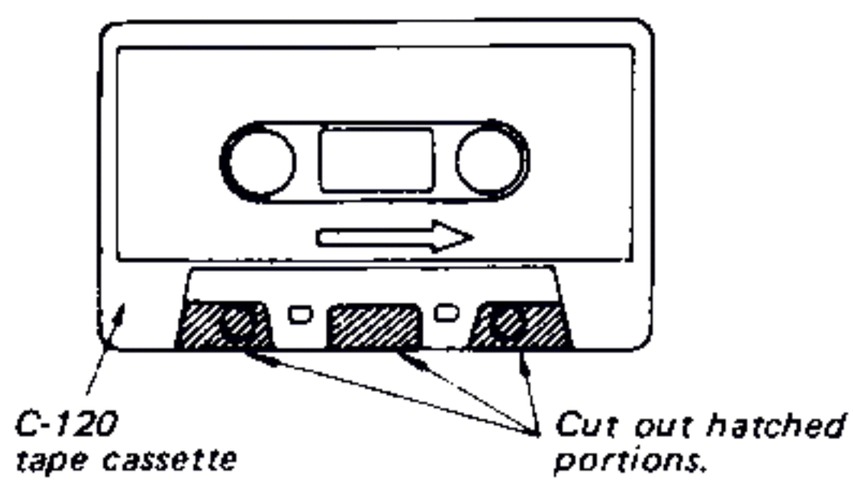

2. In playback mode and viewing from the front, adjust the head heights to eliminate tape curl and tape twist at arrowed portions.

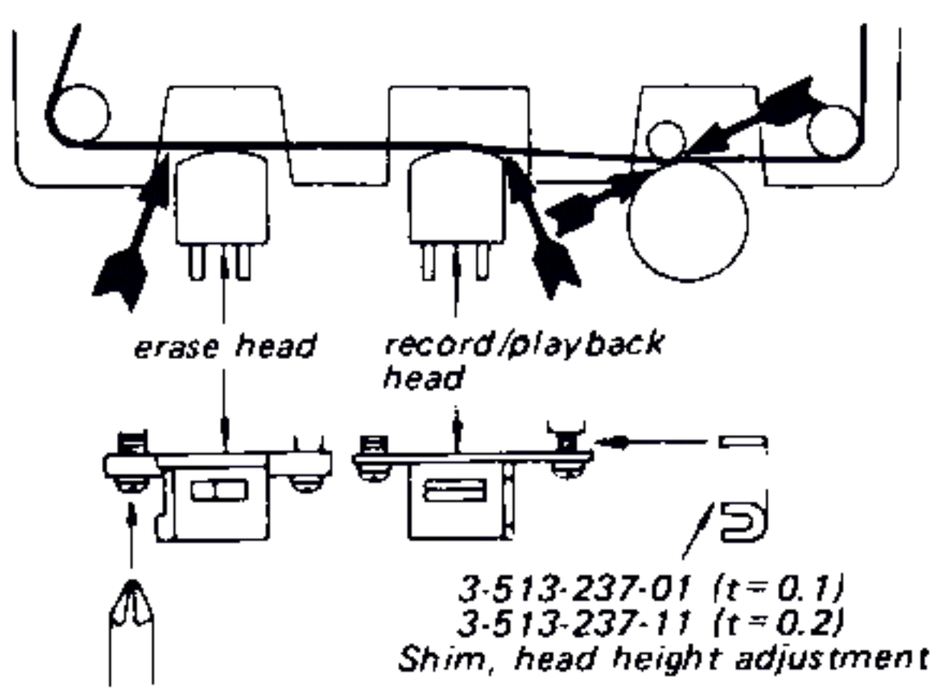

Pinch Roller Pressure Adjustment

– Playback Mode –

1. Pull the spring scale.
2. Slowly return the pinch roller and read the spring scale just when the pinch roller starts to rotate.
3. If necessary, bend the portion Ⓐ.

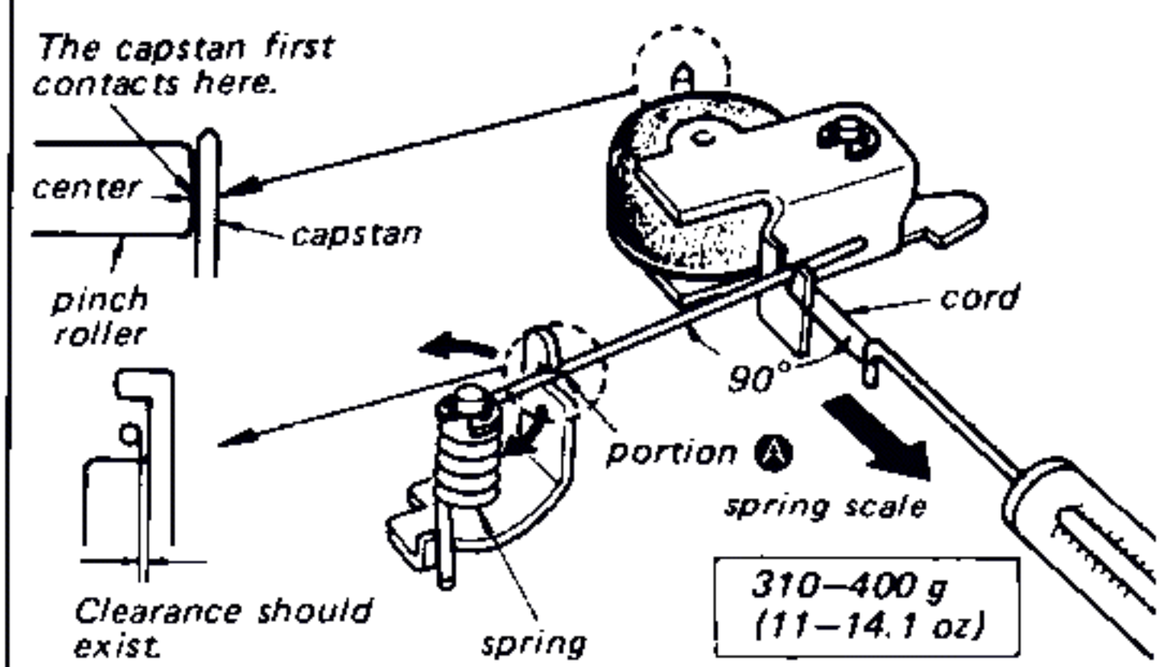

Note: If necessary, replace the spring.

Flywheel Thrust Play Adjustment

— Playback Mode —

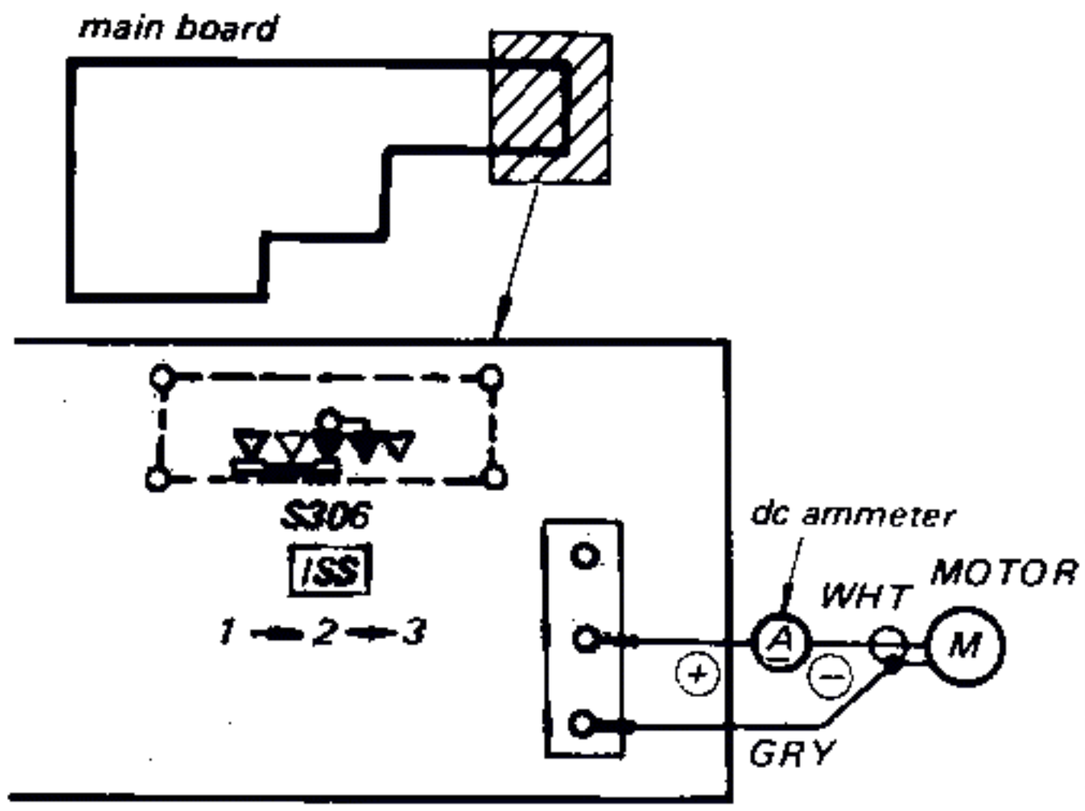

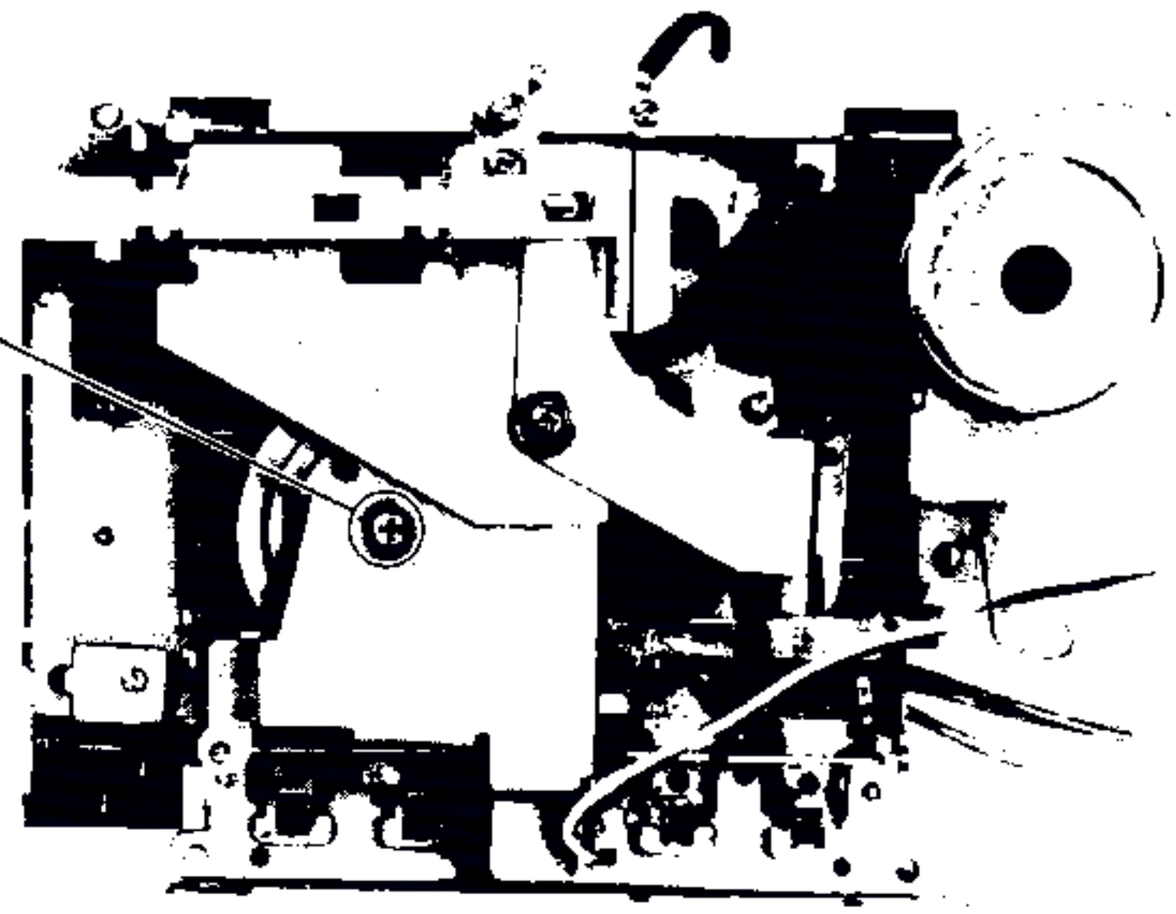

1. Disconnect a lead wire (white) of the motor and connect the dc ammeter as shown above.
2. Turn the thrust screw counterclockwise until the screw tip is detached from the flywheel shaft.
3. Gradually turn the thrust screw clockwise to the position where the motor current suddenly increases.
4. Then, turn the thrust screw counterclockwise about ¼ turn from the position obtained in step 2.

3-2. ELECTRICAL ADJUSTMENTS

MW SECTION (AEP, E model)

Setting: FUNCTION (3) switch: TUNER
FUNCTION (1) switch: MW

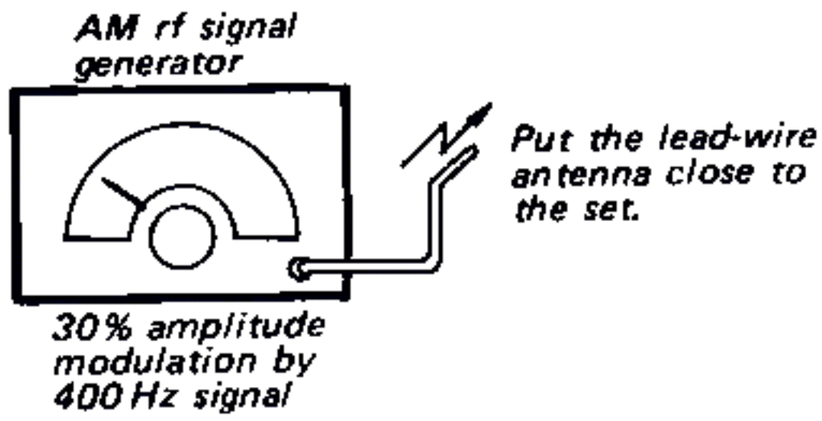

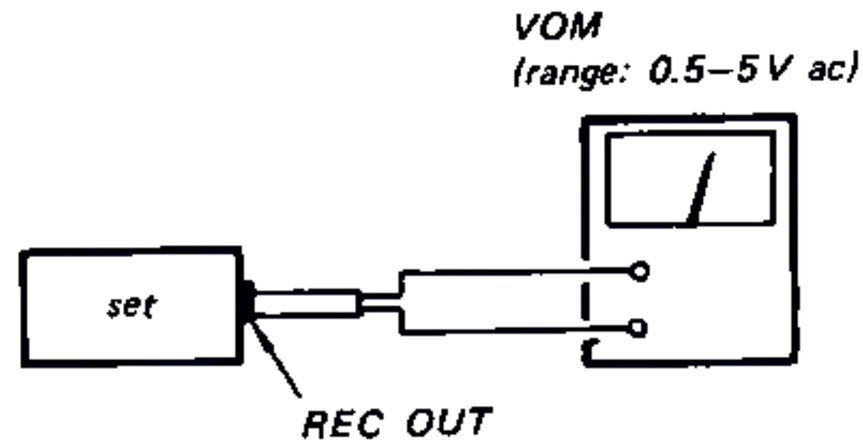

- Repeat the procedures in each adjustment several times, and the frequency coverage and tracking adjustments should be finally done by the trimmer capacitors.

AEP model

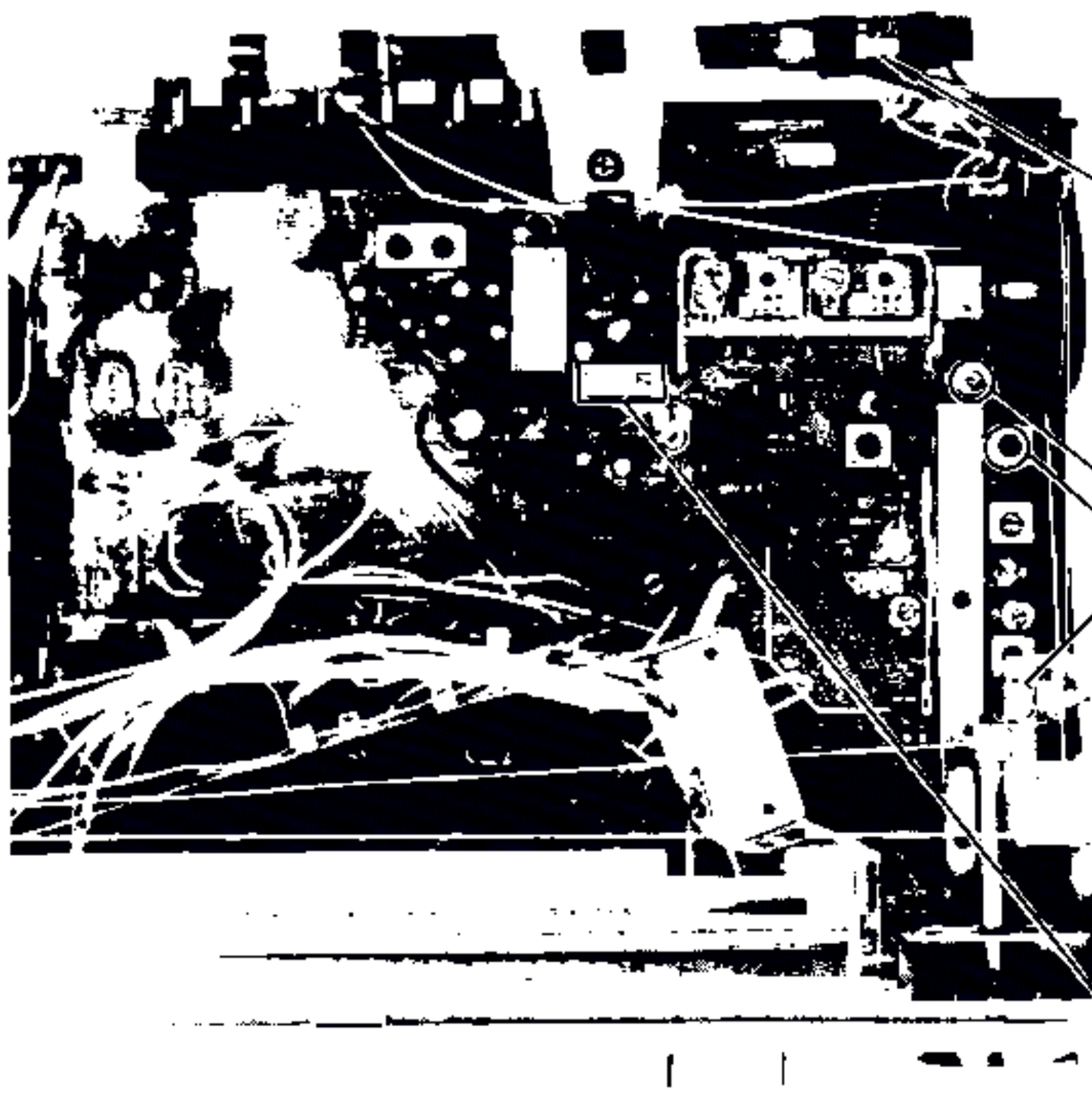

MW TRACKING ADJUSTMENT	
Adjust for a maximum reading on VOM .	
L55	620 kHz
CT55	1400 kHz

MW FREQUENCY COVERAGE ADJUSTMENT	
Adjust for a maximum reading on VOM .	
CT52	1680 kHz
L52	520 kHz

AM IF ALIGNMENT	
Adjust for a maximum reading on VOM .	
CFU101	468 kHz

E model

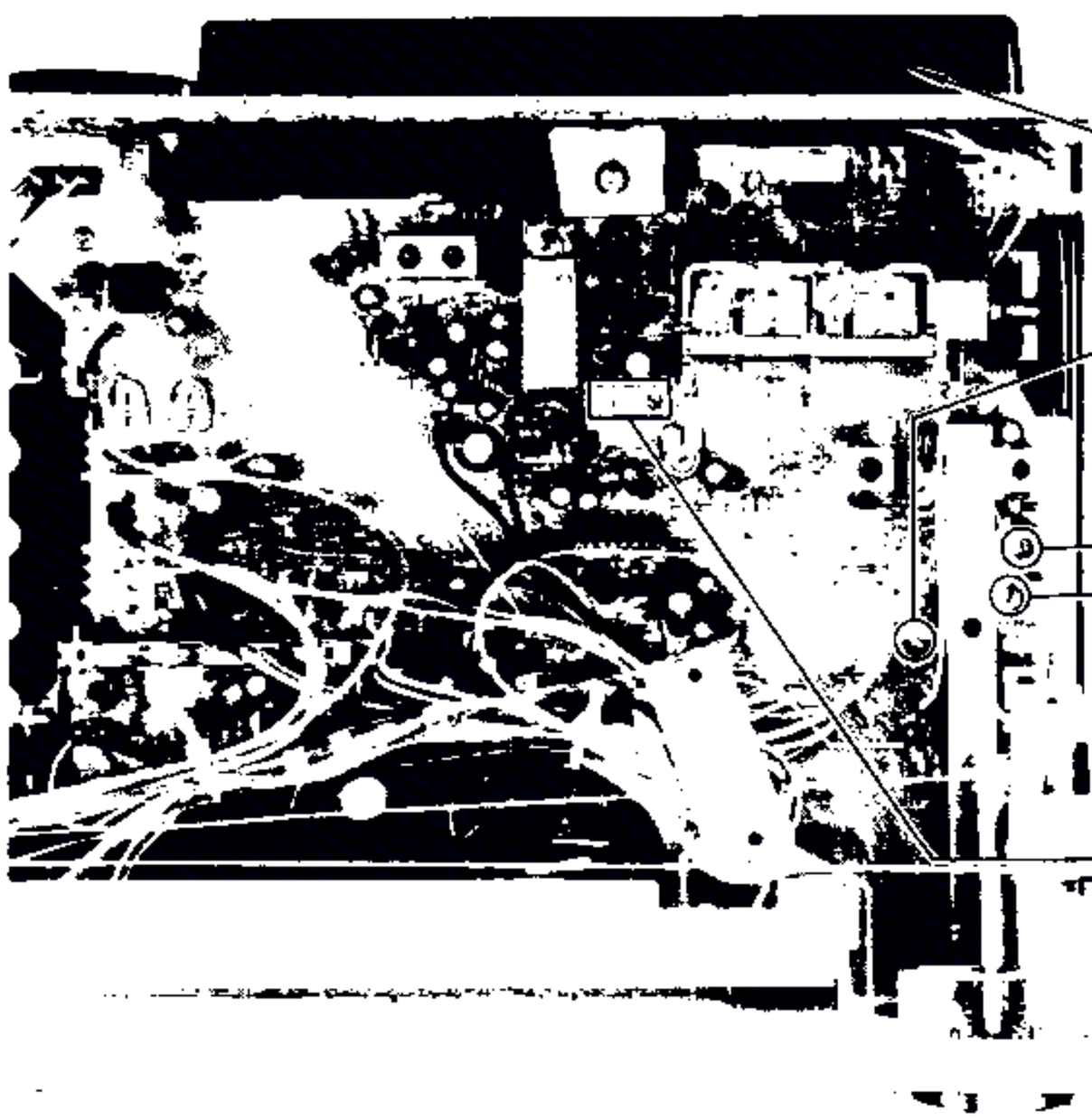

MW TRACKING ADJUSTMENT	
Adjust for maximum reading on VOM .	
L54	620 kHz
CT54	1400 kHz

MW FREQUENCY COVERAGE ADJUSTMENT	
Adjust for maximum reading on VOM .	
L51	520 kHz
CT51	1680 kHz

AM IF ALIGNMENT	
Adjust for maximum reading on VOM .	
CFU101	468 kHz

SW, LW SECTION (AEP model)

Setting: FUNCTION (3) switch: TUNER
FUNCTION (1) switch: SW or LW

- **LW FREQUENCY COVERAGE ADJUSTMENT**
  LW TRACKING ① ADJUSTMENT
  AM IF ALIGNMENT

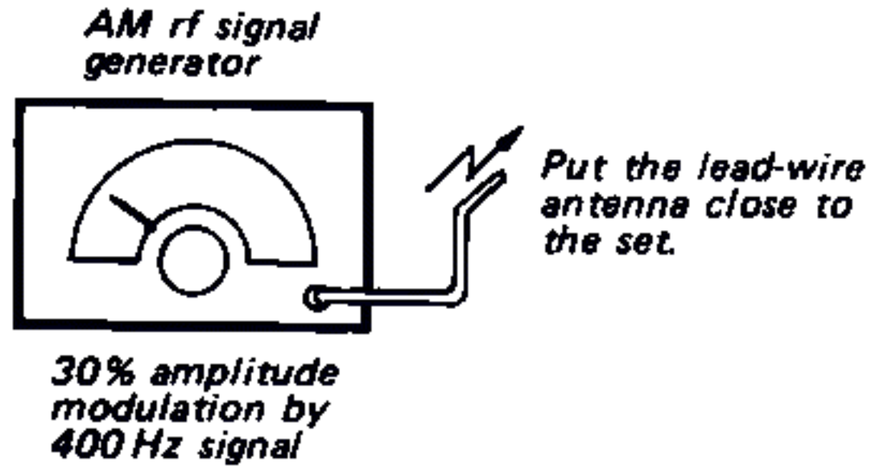

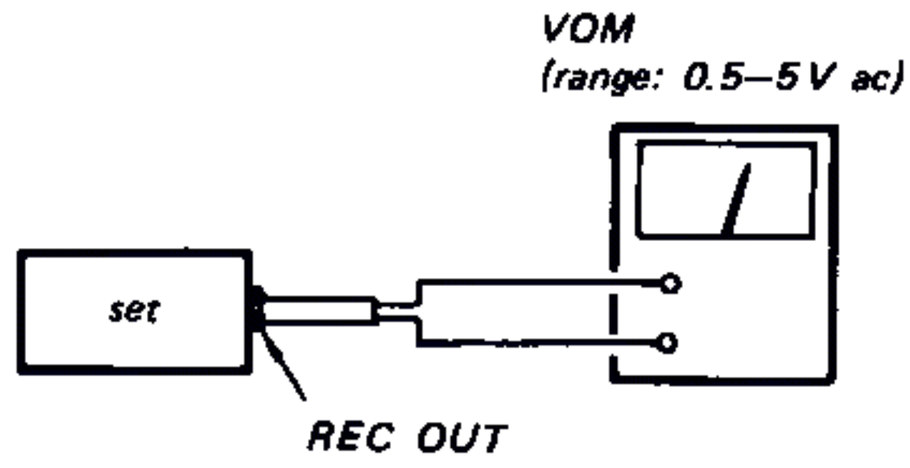

- Repeat the procedures in each adjustment several times, and the frequency coverage and tracking adjustments should be finally done by the trimmer capacitors.

- **SW FREQUENCY COVERAGE ADJUSTMENT**
  SW TRACKING ADJUSTMENT
  LW TRACKING ② ADJUSTMENT

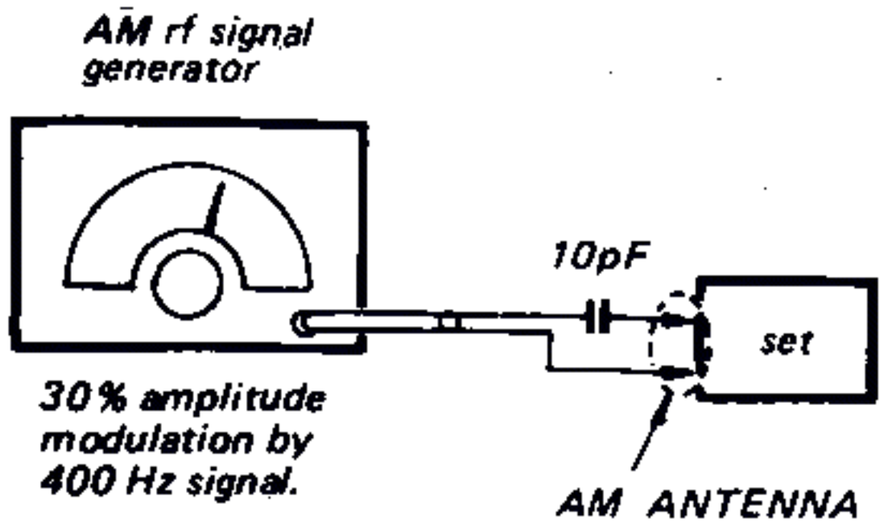

- Perform the LW TRACKING ADJUSTMENT in the numerical order given.

LW TRACKING ① ADJUSTMENT	
Adjust for a maximum reading on VOM.	
L54	170 kHz
CT54	310 kHz

LW FREQUENCY COVERAGE ADJUSTMENT	
Adjust for a maximum reading on VOM.	
L51	145 kHz
CT51	365 kHz

AM IF ALIGNMENT	
Adjust for a maximum reading on VOM.	
CFU101	468 kHz

LW TRACKING ② ADJUSTMENT	
LW ANTENNA SELECTOR switch (S5) : ON. Adjust for a maximum reading on VOM.	
L57	240 kHz

SW FREQUENCY COVERAGE ADJUSTMENT	
Adjust for a maximum reading on VOM.	
CT53	16.1 MHz
L53	5.5 MHz

SW TRACKING ADJUSTMENT	
Adjust for a maximum reading on VOM.	
CT56	16.1 MHz
L56	5.5 MHz

SW1, 2 SECTION (E model)

Setting: FUNCTION (3) switch: TUNER
FUNCTION (1) switch: SW1 or SW2

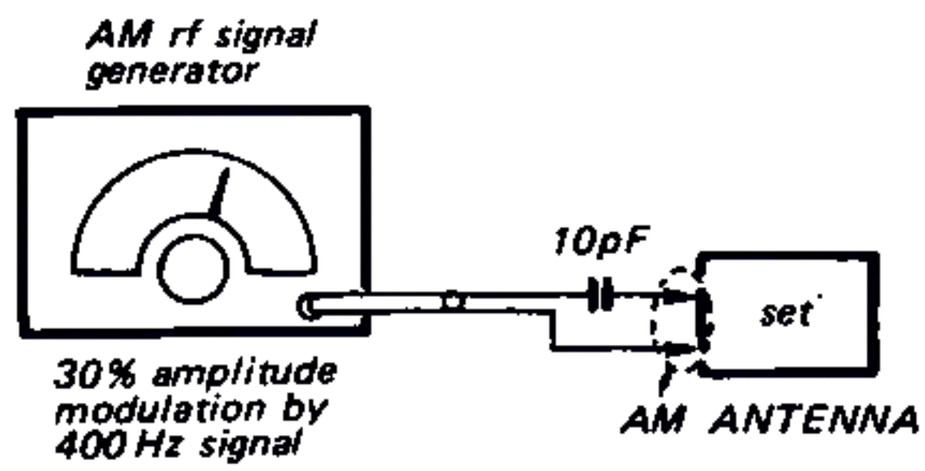

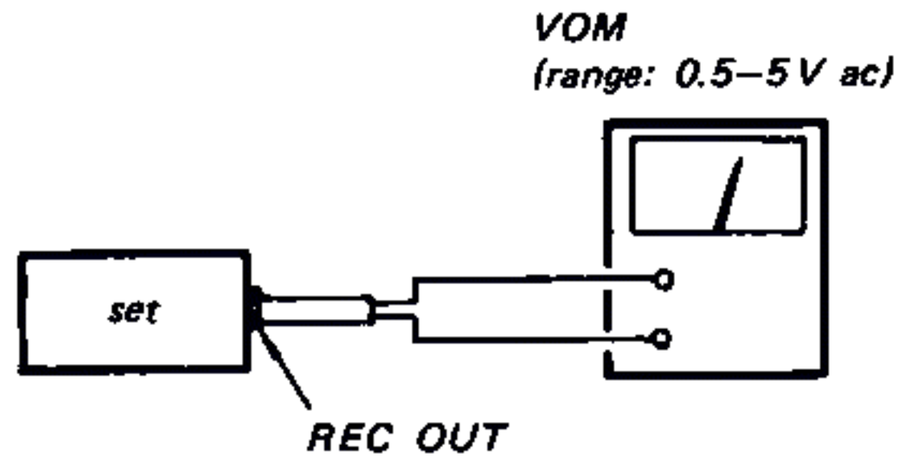

- Repeat the procedures in each adjustment several times, and the frequency coverage and tracking adjustments should be finally done by the trimmer capacitors.

SW 2 FREQUENCY COVERAGE ADJUSTMENT	
Adjust for a maximum reading on VOM.	
18.4 MHz	CT53
6.8 MHz	L53

SW1 FREQUENCY COVERAGE ADJUSTMENT	
Adjust for maximum reading on VOM.	
CT52	6.5 MHz
L52	2.1 MHz

SW2 TRACKING ADJUSTMENT	
Adjust for a maximum reading on VOM.	
CT56	18.4 MHz
L56	6.8 MHz

SW1 TRACKING ADJUSTMENT	
Adjust for maximum reading on VOM.	
CT55	6.5 MHz
L55	2.1 MHz

468 kHz	CFU101
Adjust for a maximum reading on VOM.	
AM IF ALIGNMENT	

FM SECTION (AEP, E model)

FM DISCRIMINATOR ALIGNMENT 1

Setting: FUNCTION (3) switch: TUNER
FUNCTION (1) switch: FM MONO

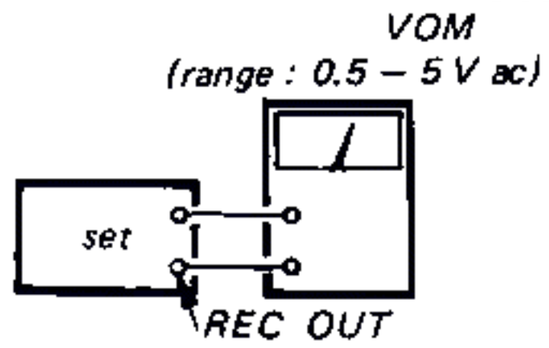

Procedure:

1. Detune the set.
2. Adjust T101 (primary side) for a maximum on the VOM.

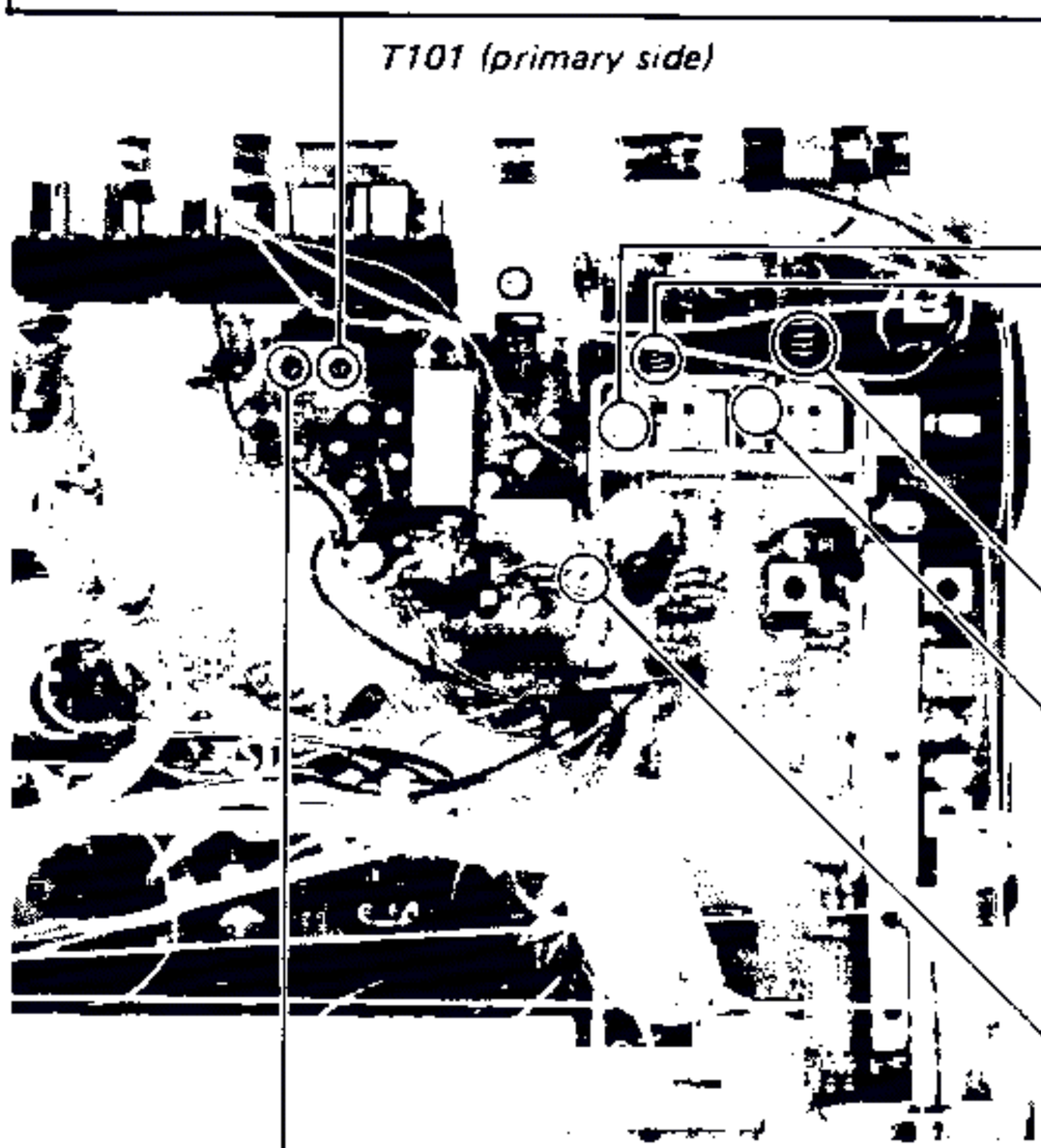

FM DISCRIMINATOR ALIGNMENT 2

Setting: FUNCTION (3) switch: TUNER
FUNCTION (2) switch: FM MONO

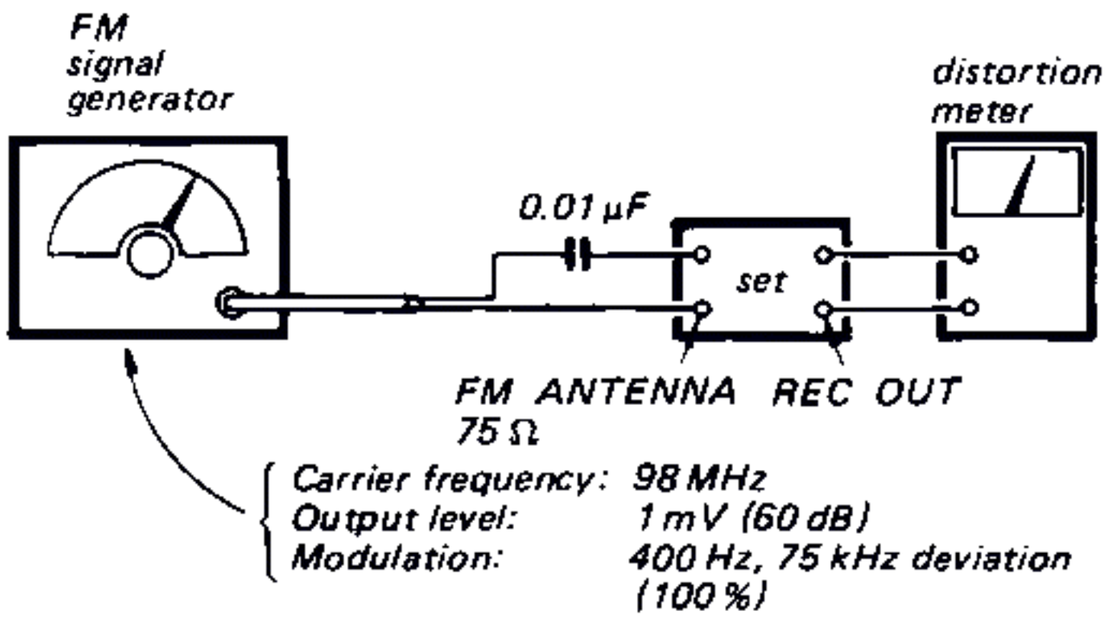

Procedure:

Adjust T101 (secondary side) for a minimum reading on the distortion meter.

- Perform this adjustment after the FM discriminator alignment 1.

FM FREQUENCY COVERAGE AND TRACKING ADJUSTMENT

Setting: FUNCTION (3) switch: TUNER
FUNCTION (1) switch: FM MONO

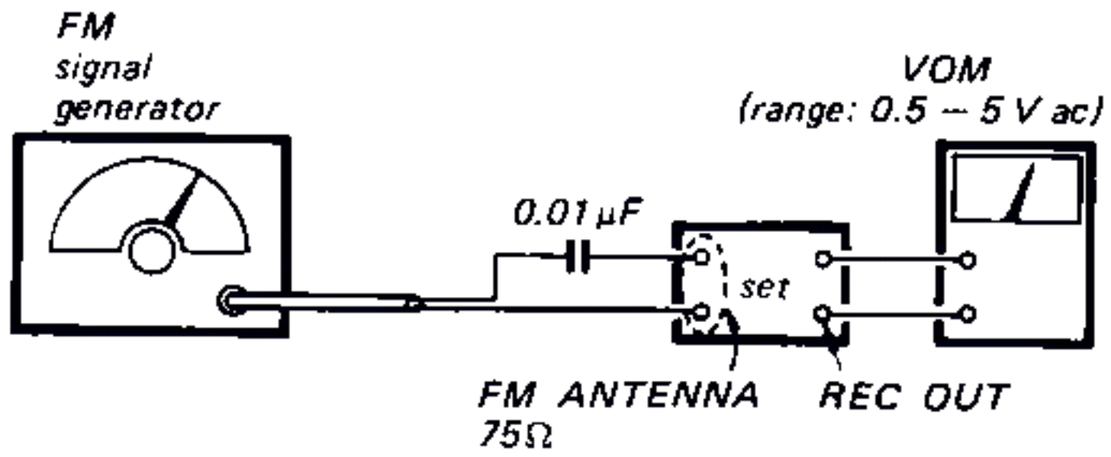

- Repeat the procedures in each adjustment several times, and the frequency coverage and tracking adjustments should be finally done by the trimmer capacitors.

FM FREQUENCY COVERAGE ADJUSTMENT	
Adjust for a maximum reading on VOM.	
CT2	108.5 MHz (108.0 MHz)
L3	87.1 MHz (87.5 MHz)

( ): in West Germany

FM TRACKING ADJUSTMENT	
Adjust for a maximum reading on VOM.	
L1	87.1 MHz (87.5 MHz)
CT1	108.5 MHz (108.0 MHz)

( ): in West Germany

RV206

19 kHz ADJUSTMENT

Setting: FUNCTION (3) switch: TUNER
FUNCTION (1) switch: FM STEREO

Procedure:

1. Tune the set to the FM stereo broadcasting signal.
2. Turn RV206 clockwise or counterclockwise and memorize the lighting-up range of D202 (STEREO).
3. Secure RV206 at the center in lighting-up range of both turns as shown below.

TAPE RECORDER SECTION (AEP, E model)

Note: The adjustment should be performed in the order given in this service manual. The adjustments should be performed for both L-CH and R-CH.

Switches and controls should be set as follows unless otherwise specified.

TAPE SELECT switch. . . . . NORMAL
FUNCTION (2) switch . . . . . CASSETTE/mic
FUNCTION (3) switch . . . . . AUX

Standard Record:

Supply the standard input signal to the input jack and set the REC LEVEL control to obtain the standard output signal level.

Standard Input Level

	MIC	AUX
source impedance	600 Ω	47 kΩ
input level	3.1 mV (−48 dB)	0.44 V (−5 dB)

Standard Output Level

	REC OUT
load impedance	10 kΩ
output level	0.25 V (−10 dB)

Tape Speed Adjustment

Procedure:

Mode: playback

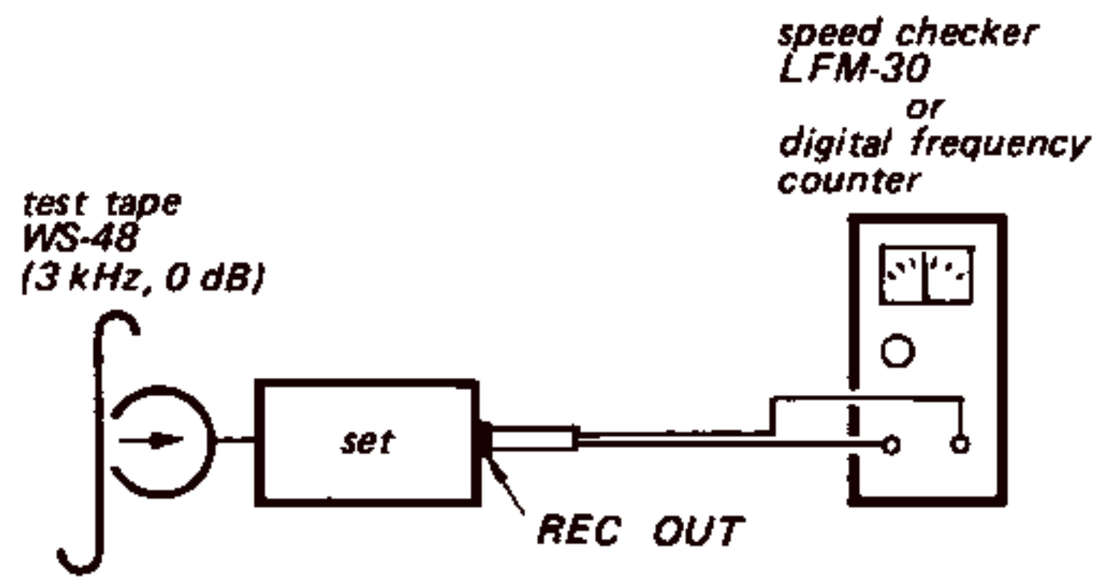

Specification:

Speed checker	Digital frequency counter
−2 – +2.5 %	2,940 – 3,075 Hz

Frequency difference between beginning and end of tape should be within 1 % (30 Hz).

Adjustment Location:

If necessary, replace the motor pulley.

Motor pulley Part No.	Marking	Tape speed change
3-549-088-01	one groove	up
3-549-088-11	no mark	↕
3-549-088-21	two grooves	
		down

Record Bias Adjustment

Setting: ISS switch: 2

Procedure:

Mode : standard record (see page 13).

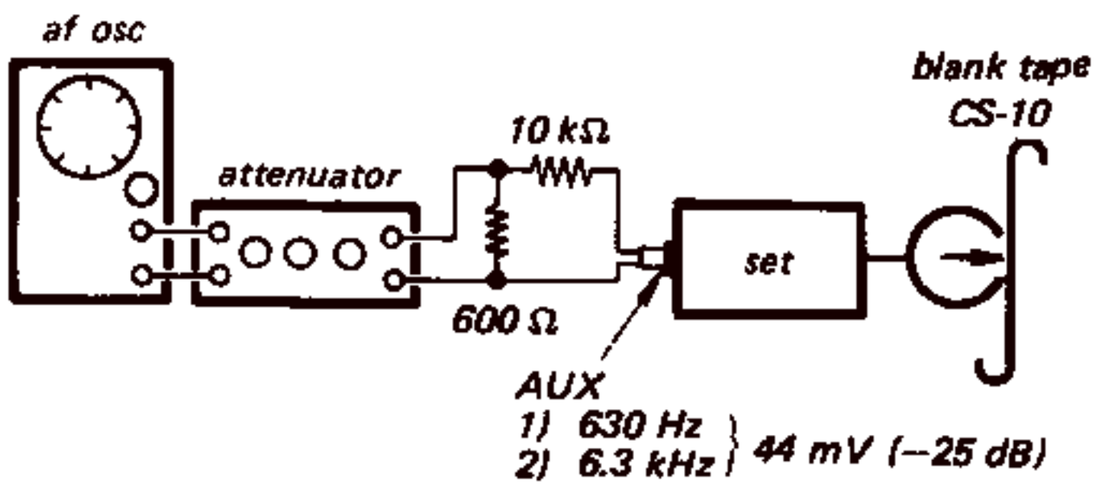

Mode : playback

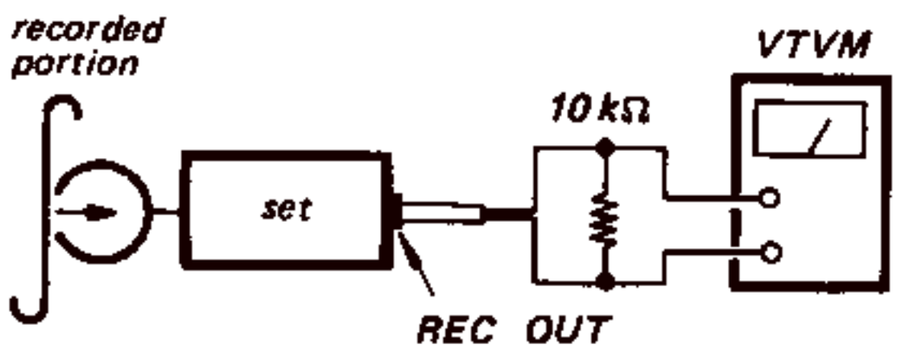

3. Adjust RV 301 and RV 401 to make 630 Hz and 6.3 kHz signal output levels equal.

   Level difference between 630 Hz and 6.3 kHz signals: −1 – +1 dB.

Adjustment Location:

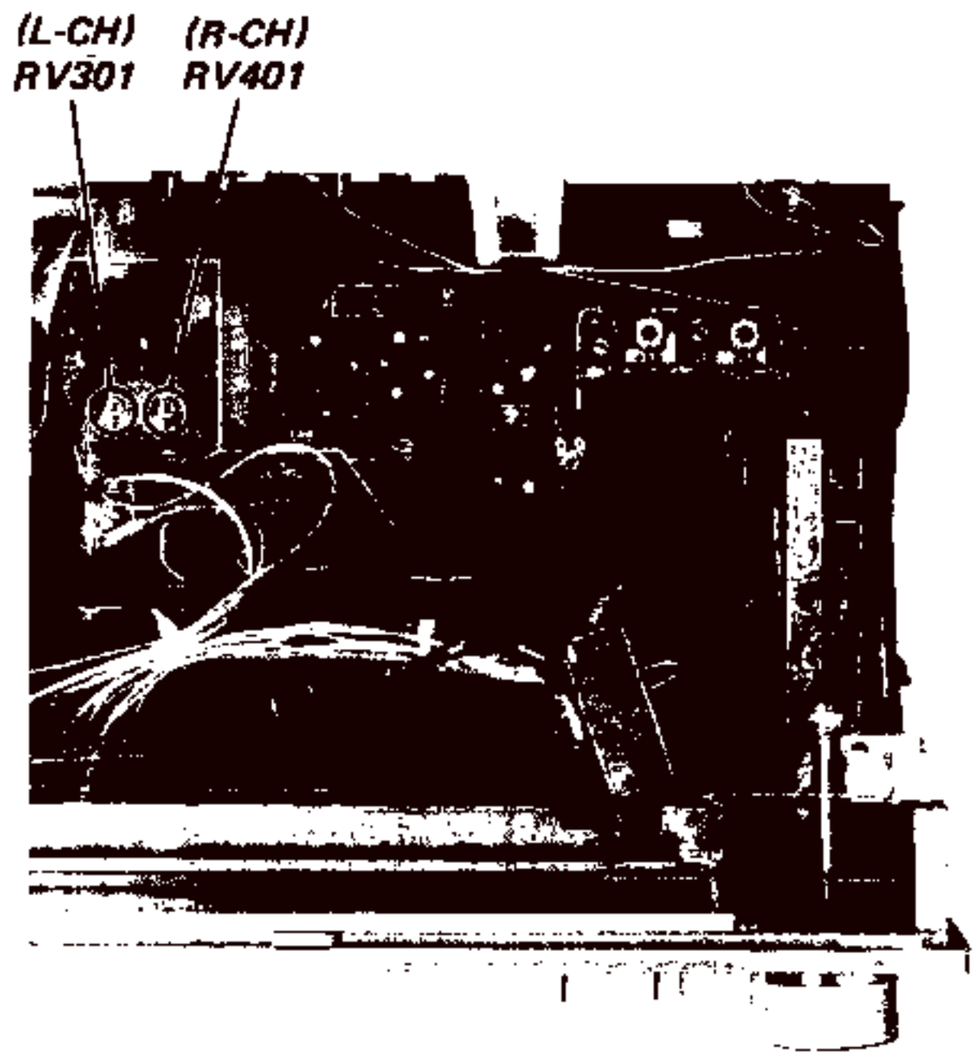

Record/playback Head Azimuth Adjustment

Procedure:

1. Mode: playback

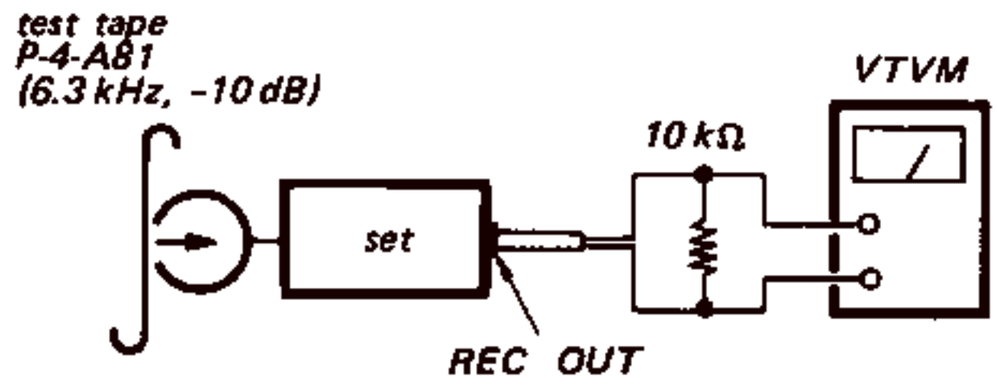

2. Turn the adjustment screw for the maximum level and set it to the mechanical mid position between L-CH and R-CH peak positions.

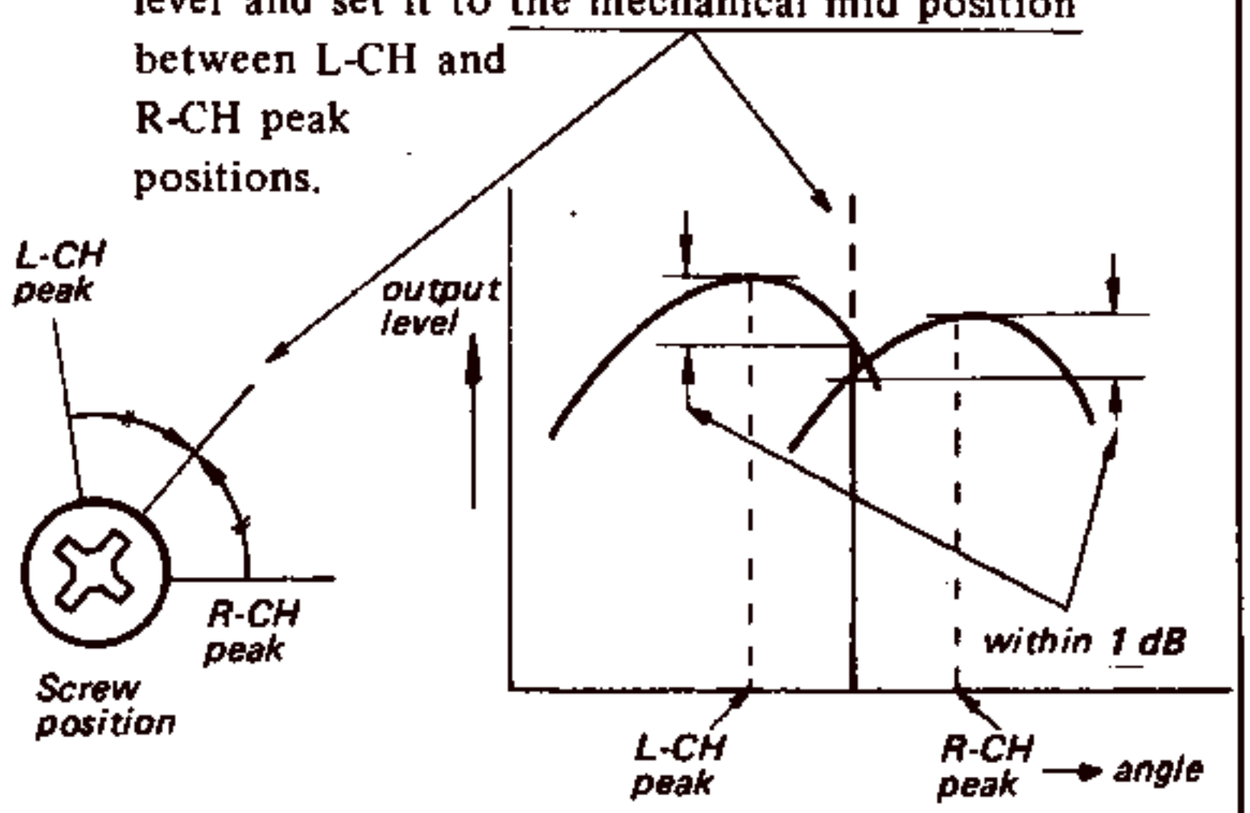

3. Mode: playback

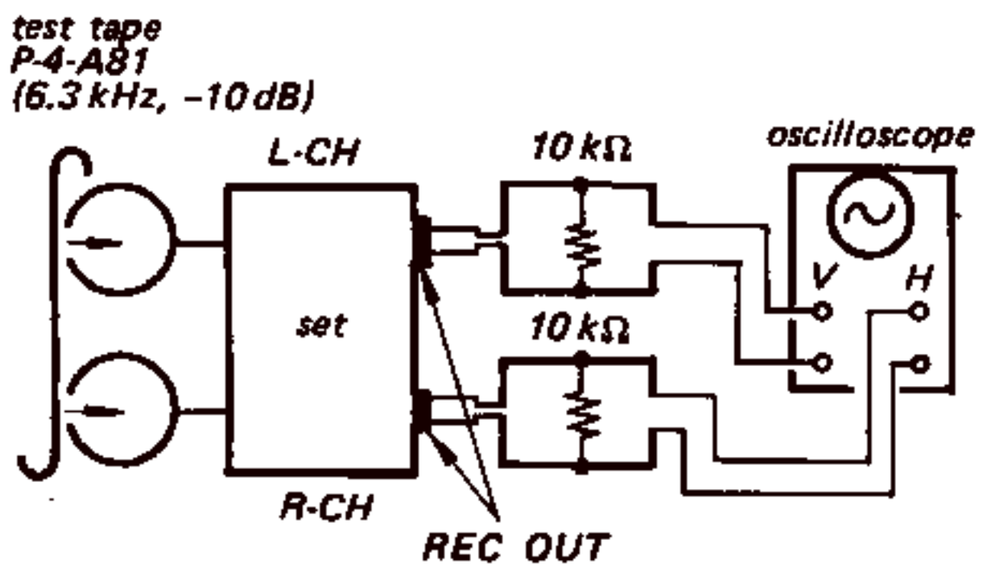

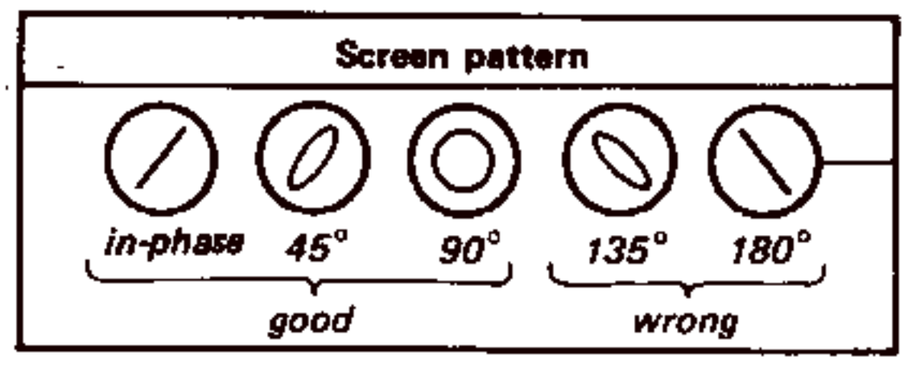

Adjustment Location:

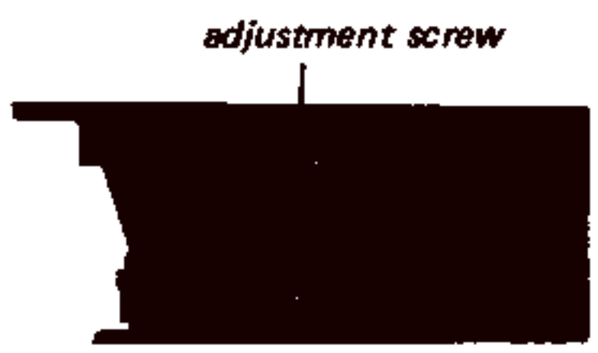

- **Replacement Semiconductors**

For replacement, use semiconductors except in ( ).

Q1–3 : 2SC710–14 (2SC710)

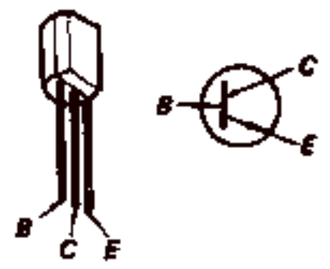

Q101 : 2SC1364
Q301, 401 : 2SC1362 (2SC631A)

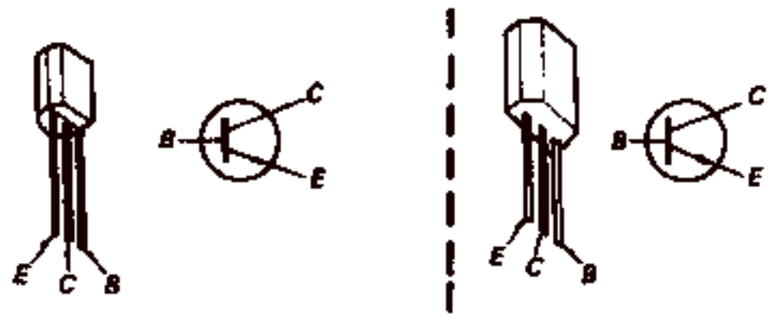

Q302 : 2SA678

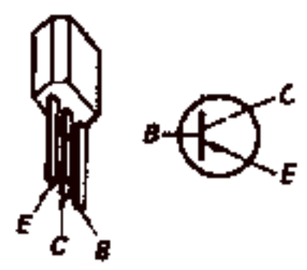

Q901 : 2SC1061 (2SC1173)

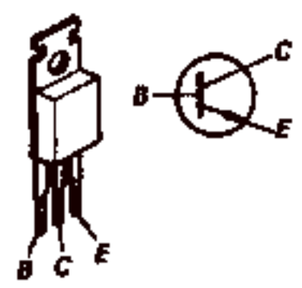

IC101 : CX168

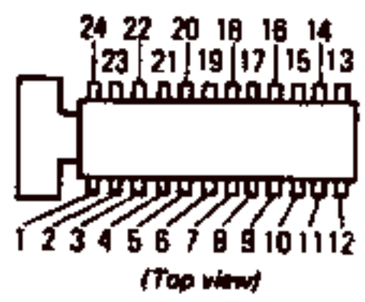

IC201 : LA3350

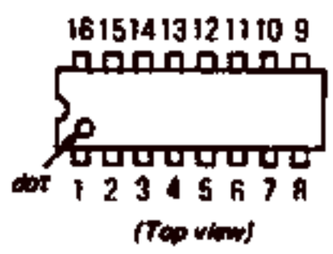

IC301 : μPC4558C

IC501, 601 : HA1350S (HA1350)

D101–104, D201 : 1S1555

D902 : 10E2 (GP08A)

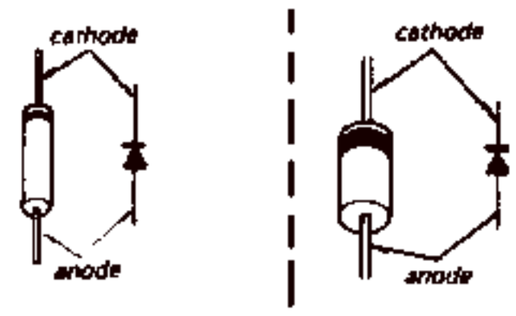

D202, 301 : SLP131B

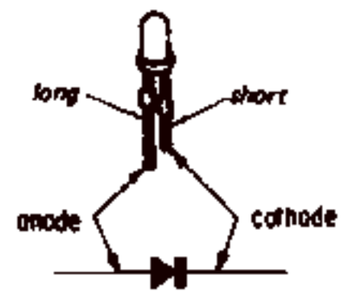

D901 : S3VC40 (MI-151R)

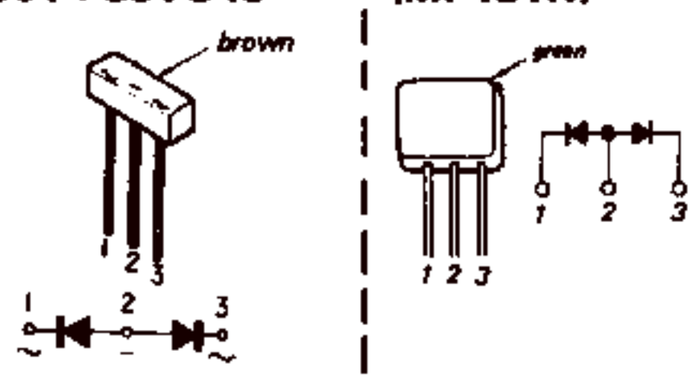

D903 : S3VC40R (MI-151)

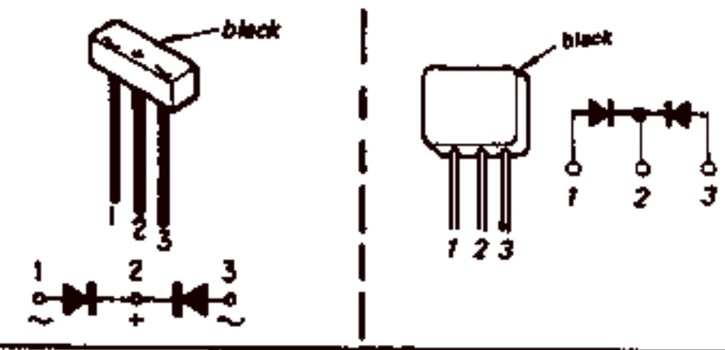

D904 : EQB01-25 (EQA01-25)

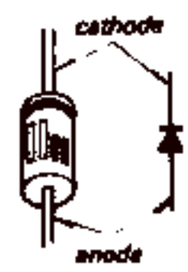

SECTION 4
DIAGRAMS

4-1. MOUNTING DIAGRAM (AEP model)
– Conductor Side –

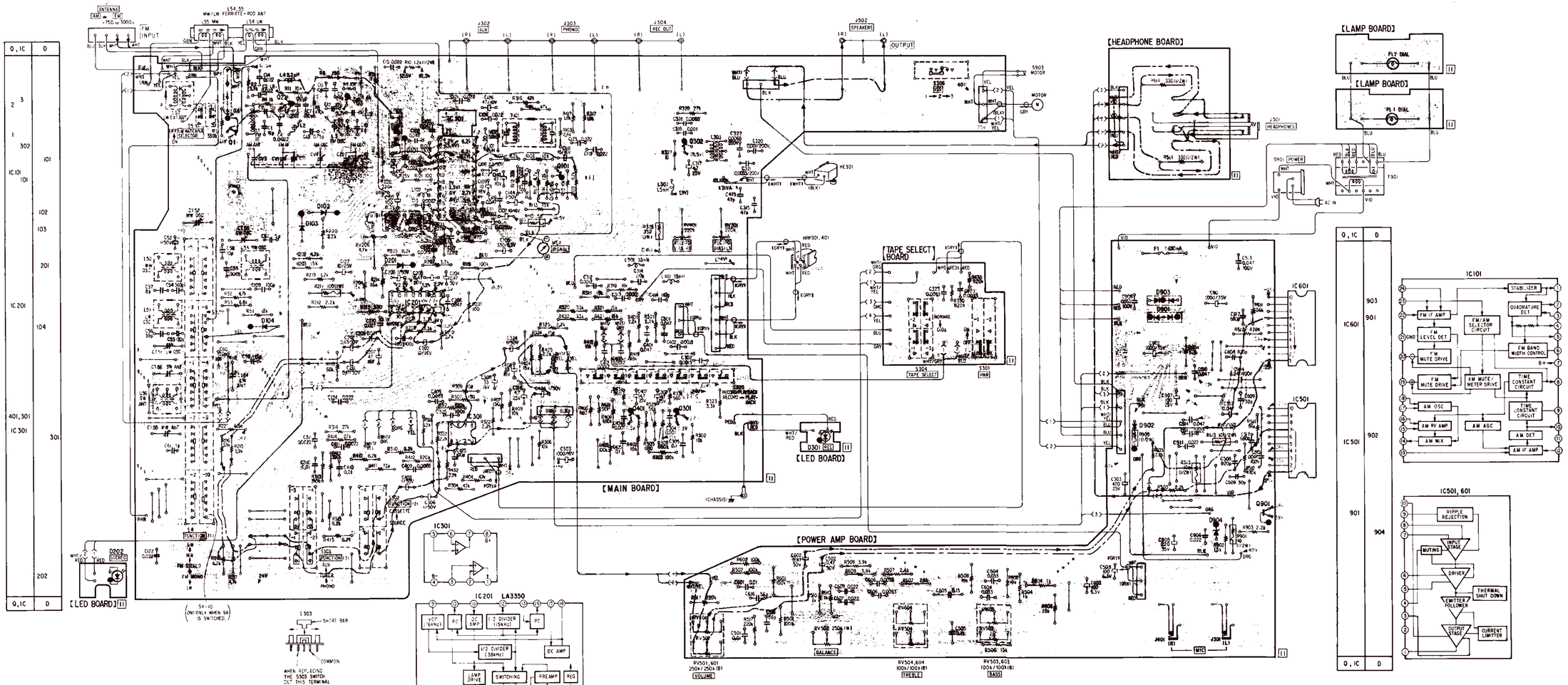

Note:

- Color code of sleeving over the and of the jacket.

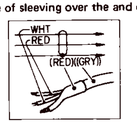

- : indicates side identified with part number.
- : B+ pattern
- : signal path
  - : L-CH
  - : R-CH

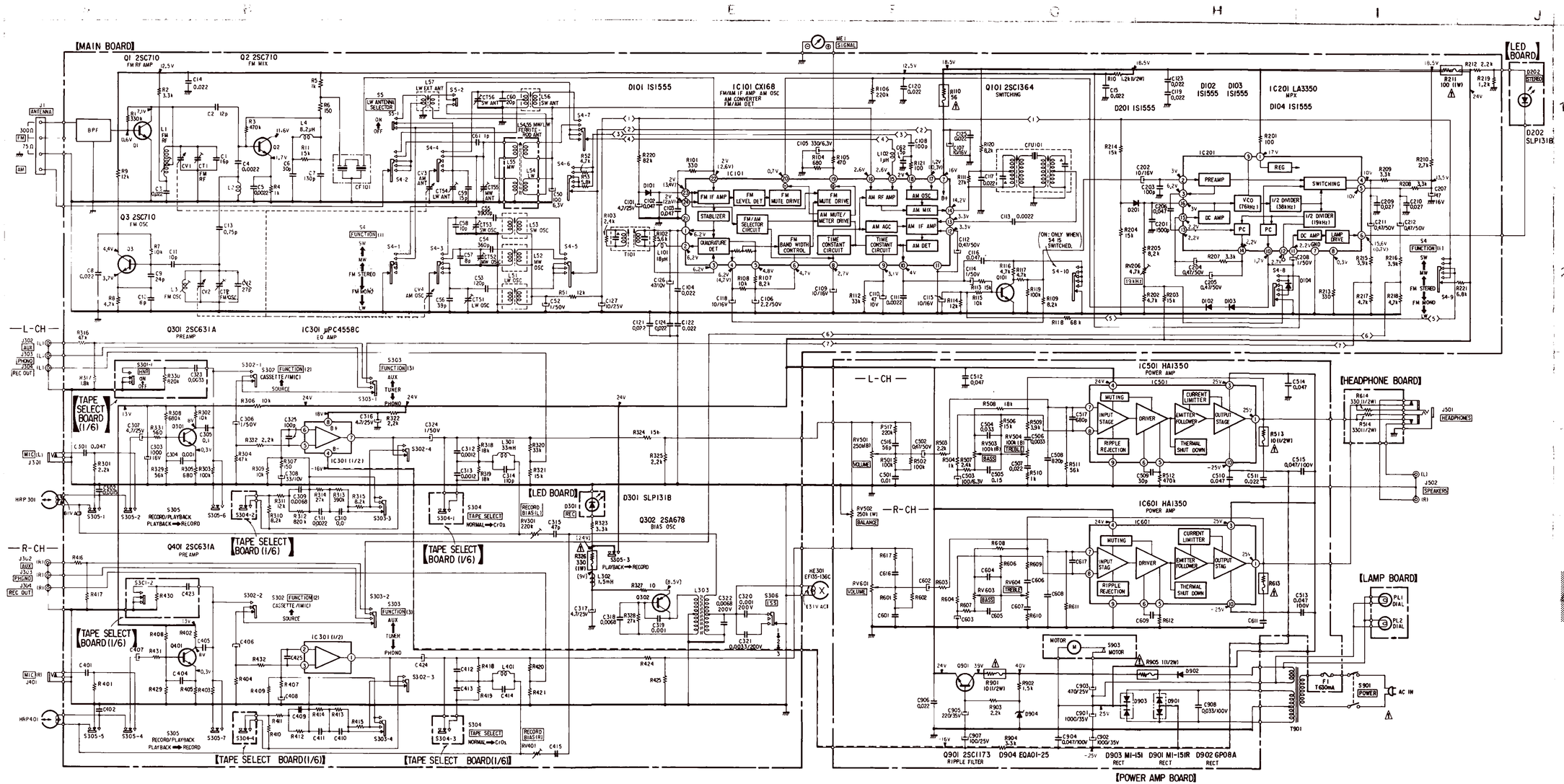

Note:

- Components for right channel have same values as for left channel.
- All capacitors are in μF unless otherwise noted. pF = μμF 50 WV or less are not indicated except for electrolytics.
- All resistors are in ohms, ¼W unless otherwise noted. kΩ = 1000 Ω, MΩ = 1000 kΩ
- : fusible resistor.
- △ : internal component.
- —— : B+ bus.
- - - - : B− bus.
- ▭ : panel designation.
- ▭ : adjustment for repair.
- Voltages are dc with respect to ground unless otherwise noted.
- Readings are taken under no signal (detuned) condictions with a VOM (20 kΩ/V).
  - ( ) : AM
  - [ ] : record
  - < > : LED (D202) light
  - (( )) : record (with VTVM)
- Voltage variations may be noted due to normal production tolerances.
- Switch

Ref. No.	Switch	Position
S4-1 to 4-10	FUNCTION (1)	FM STEREO
S5-1, 2	LW ANTENNA SELECTOR	OFF
S301-1, 2	HNR	OFF
S302-1 to 302-4	FUNCTION (2)	SOURCE
S303-1 to 303-4	FUNCTION (3)	TUNER
S304-1 to 304-4	TAPE SELECT	NORMAL
S305-1 to 305-7	RECORD/ PLAYBACK	PLAYBACK
S306	ISS	1
S901	POWER	OFF
S903	MOTOR	OFF

Note: The components identified by shading and mark ⚠ are critical for safety. Replace only with part number specified.

4-3. MOUNTING DIAGRAM (E model)

– Conductor Side –

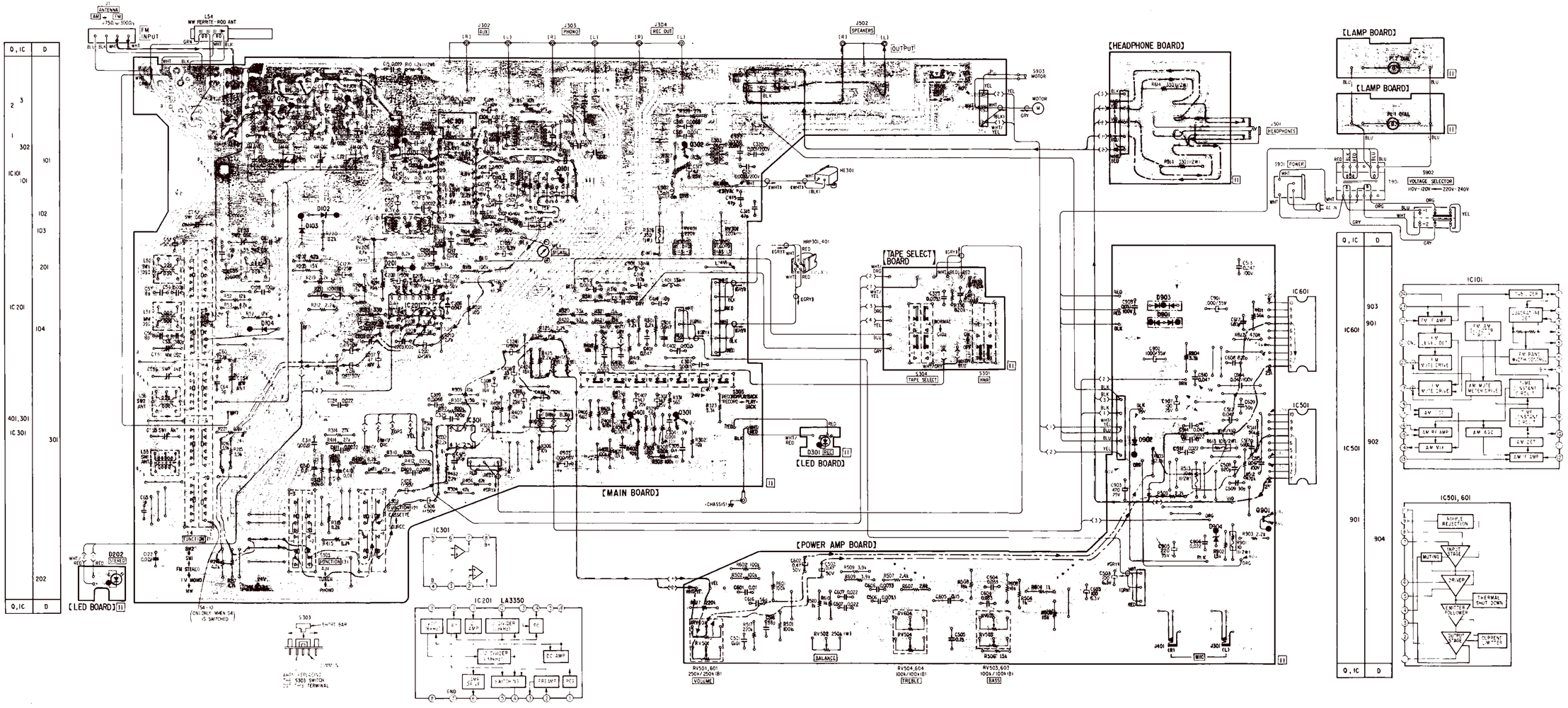

Note:

- Color code of sleeving over the and of the jacket.

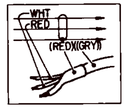

- : indicates side identified with part number.
- : B+ pattern
- : signal path
  - : L-CH
  - : R-CH

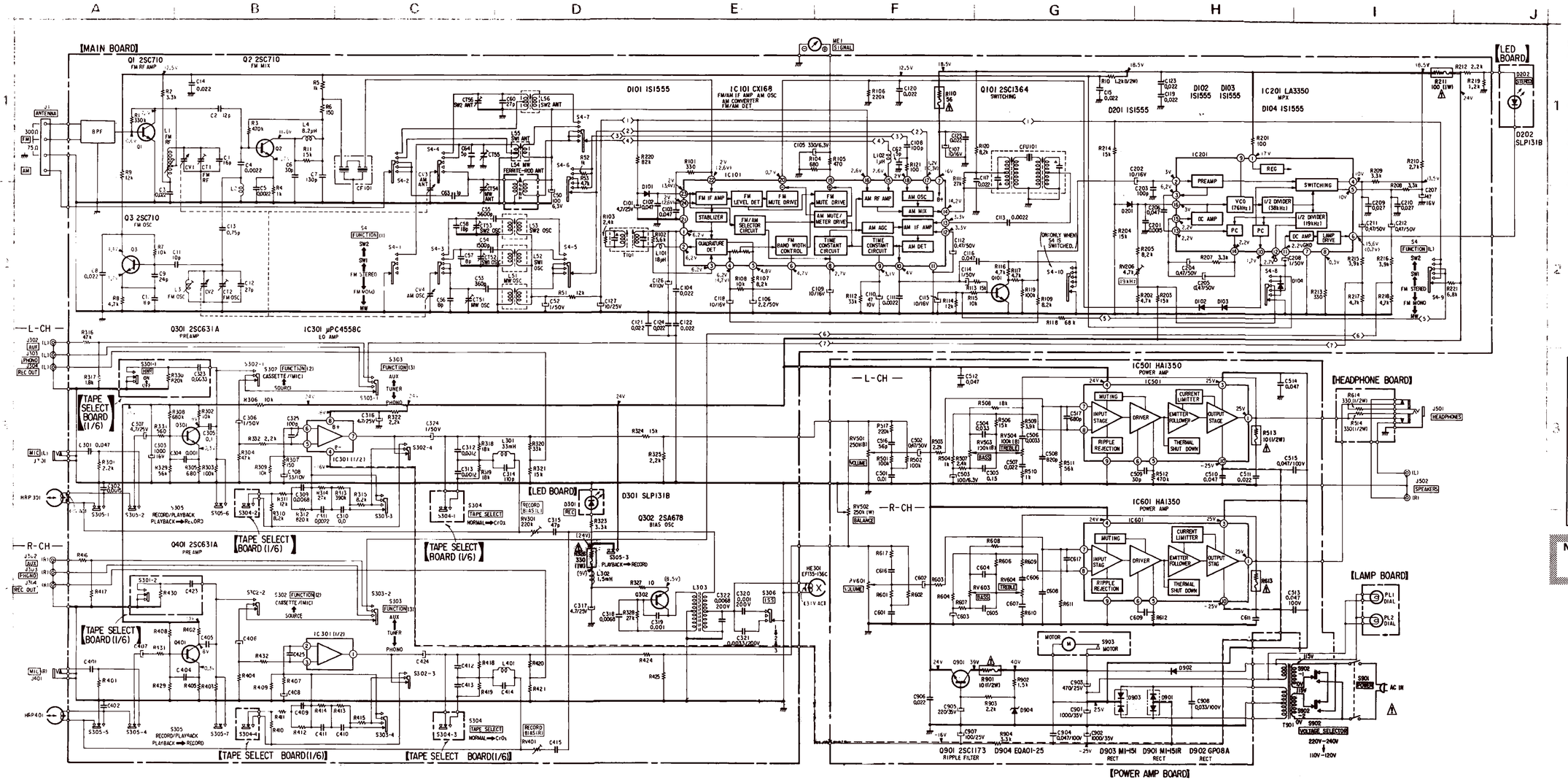

Note:

- Components for right channel have same values as for left channel.
- All capacitors are in μF unless otherwise noted. pF = μμF 50 WV or less are not indicated except for electrolytics.
- All resistors are in ohms, ¼W unless otherwise noted. kΩ = 1000 Ω, MΩ = 1000 kΩ
- ⁓⁓ : fusible resistor.
- △ : internal component.
- ——— : B+ bus.
- - - - : B− bus.
- ▭ : panel designation.
- ▭ : adjustment for repair.
- Voltages are dc with respect to ground unless otherwise noted.
- Readings are taken under no signal (detuned) condictions with a VOM (20 kΩ/V).
  ( ) : AM
  [ ] : record
  < > : LED (D202) light
  (( )) : record (with VTVM)
- Voltage variations may be noted due to normal production tolerances.
- Switch

Ref. No.	Switch	Position
S4-1 to 4-10	FUNCTION (1)	FM STEREO
S301-1, 2	HNR	OFF
S302-1 to 302-4	FUNCTION (2)	SOURCE
S303-1 to 303-4	FUNCTION (3)	TUNER
S304-1 to 304-4	TAPE SELECT	NORMAL
S305-1 to 305-7	RECORD/ PLAYBACK	PLAYBACK
S306	ISS	1
S901	POWER	OFF
S902	VOLTAGE SELECTOR	220 V–240 V
S903	MOTOR	OFF

Note: The components identified by shading and mark ⚠ are critical for safety. Replace only with part number specified.

SECTION 5
EXPLODED VIEWS

Note: • Items with no part number and/or no description are not stocked because they are seldom required for routine service.
• All screws are Phillips (cross recess) type unless otherwise noted.
(–) = slotted head
• Circled letters (Ⓐ to Ⓩ) are applicable to European models only.

(1)

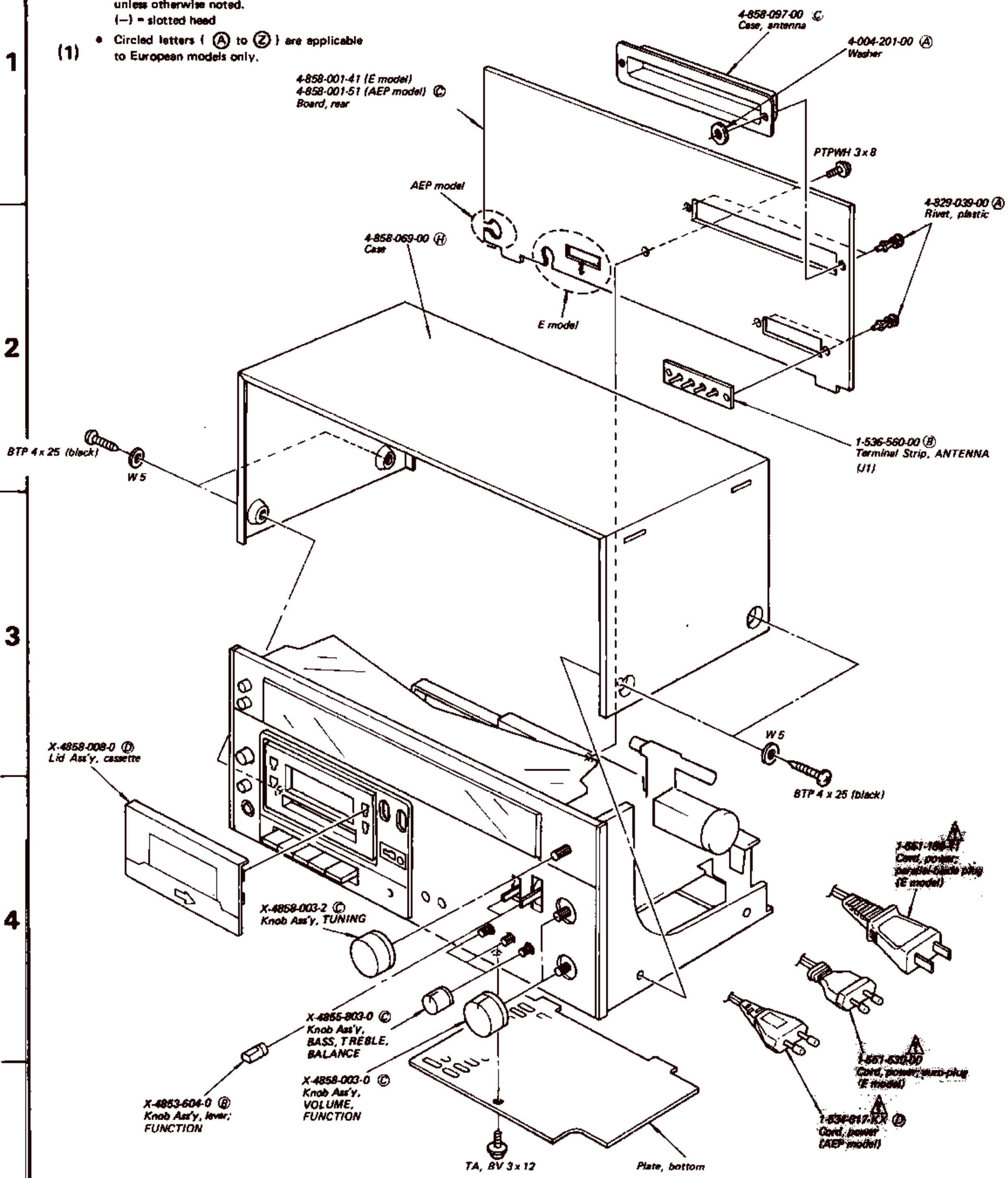

Note: The components identified by shading and mark ⚠ are critical for safety. Replace only with part number specified.

Note:

- Items with no part number and/or no description are not stocked because they are seldom required for routine service.
- All screws are Phillips (cross recess) type unless otherwise noted.
  (–) = slotted head
- Circled letters (Ⓐ to Ⓩ) are applicable to European models only.

(2)

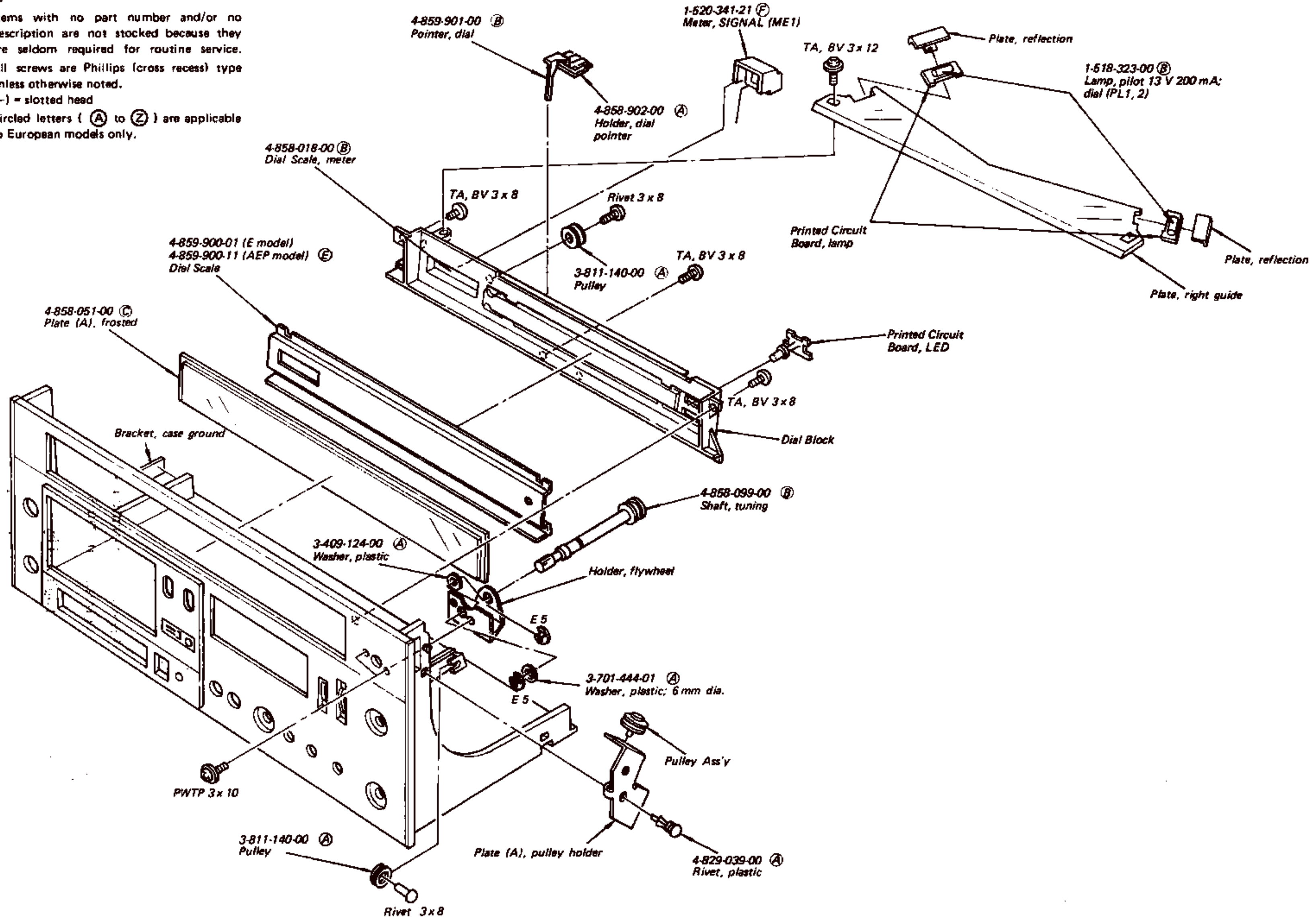

(3)

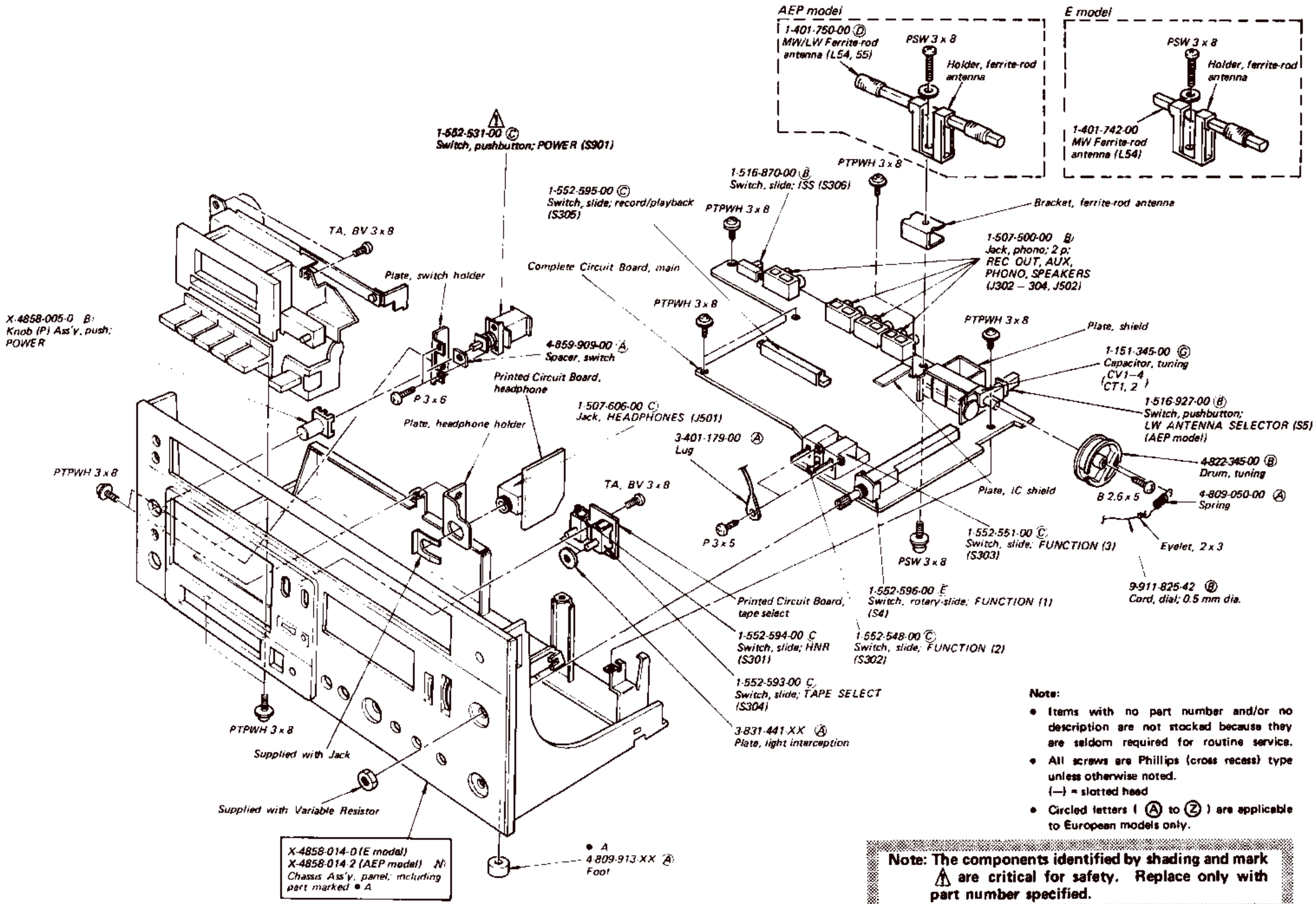

Note:

- Items with no part number and/or no description are not stocked because they are seldom required for routine service.
- All screws are Phillips (cross recess) type unless otherwise noted.
  (—) = slotted head
- Circled letters (Ⓐ to Ⓩ) are applicable to European models only.

Note: The components identified by shading and mark ⚠ are critical for safety. Replace only with part number specified.

Note: • Items with no part number and/or no description are not stocked because they are seldom required for routine service.
• All screws are Phillips (cross recess) type unless otherwise noted.
(−) = slotted head
• Circled letters (Ⓐ to Ⓩ) are applicable to European models only.

(4)

Note: The components identified by shading and mark ⚠ are critical for safety. Replace only with part number specified.

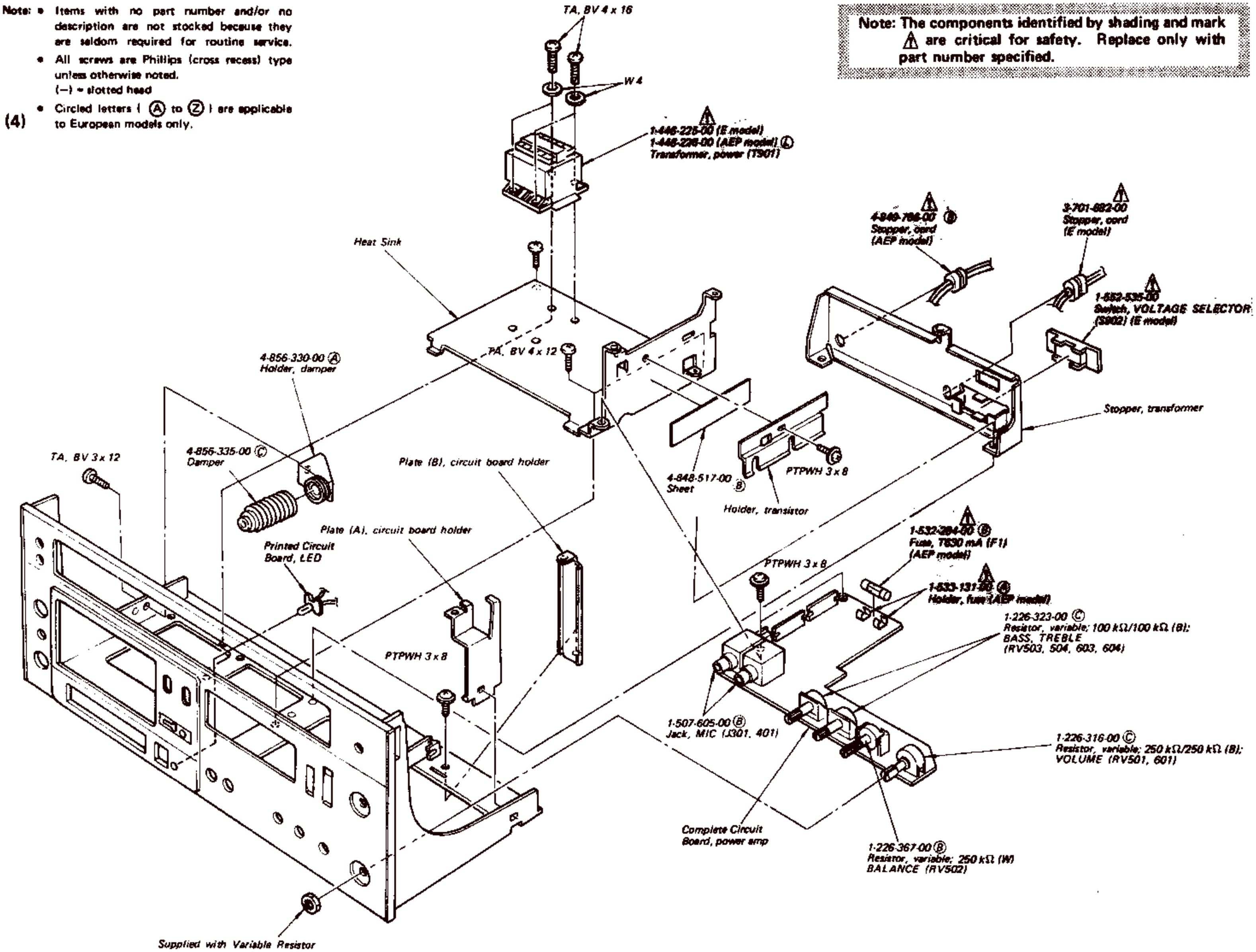

A B C D

1 2 3 4 5

Note:

- Items with no part number and/or no description are not stocked because they are seldom required for routine service.
- All screws are Phillips (cross recess) type unless otherwise noted.
  (−) = slotted head
- (□□T) shows the number of coils in spring.
- Circled letters (Ⓐ to Ⓩ) are applicable to European models only.

(5)

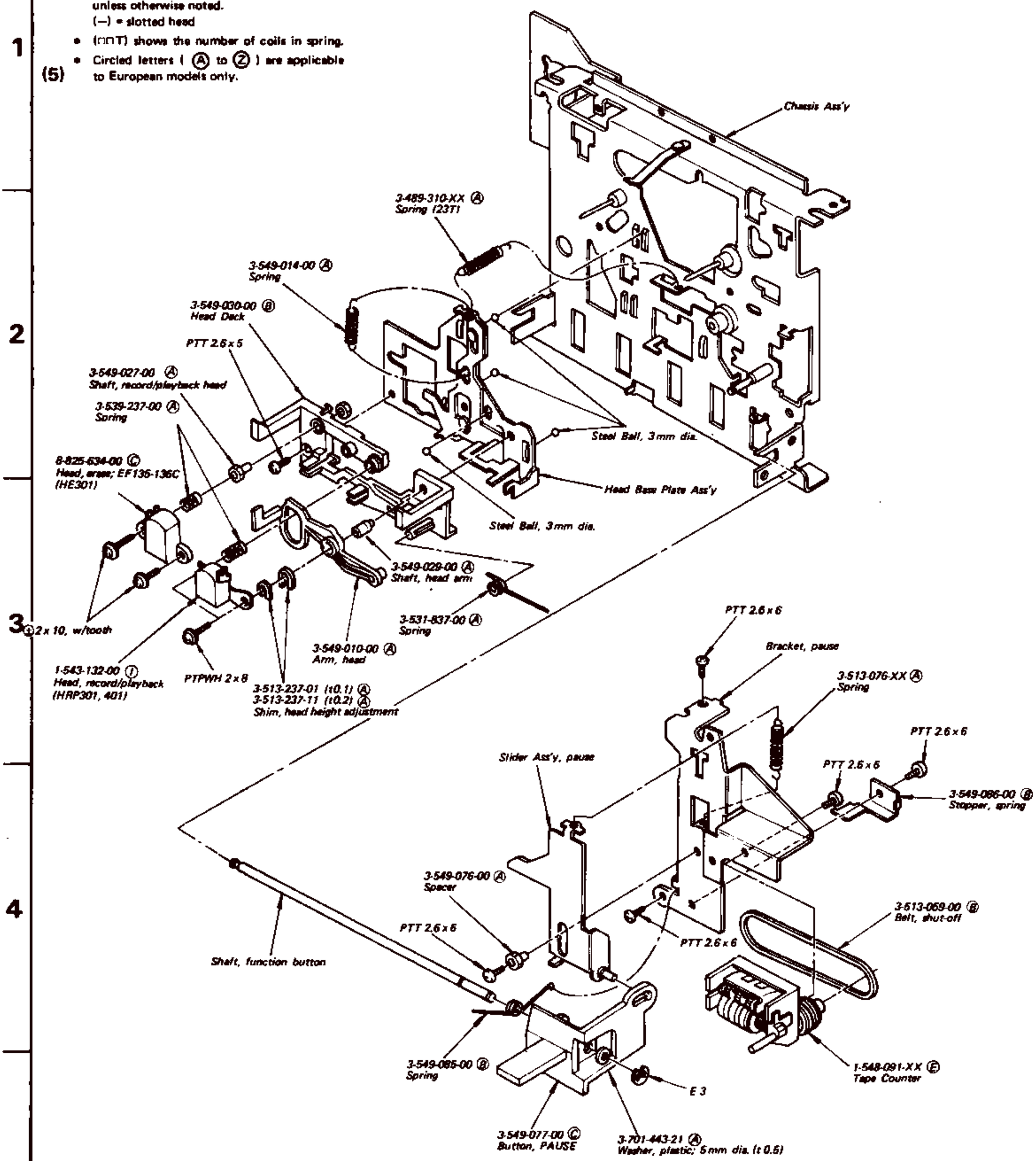

(6)

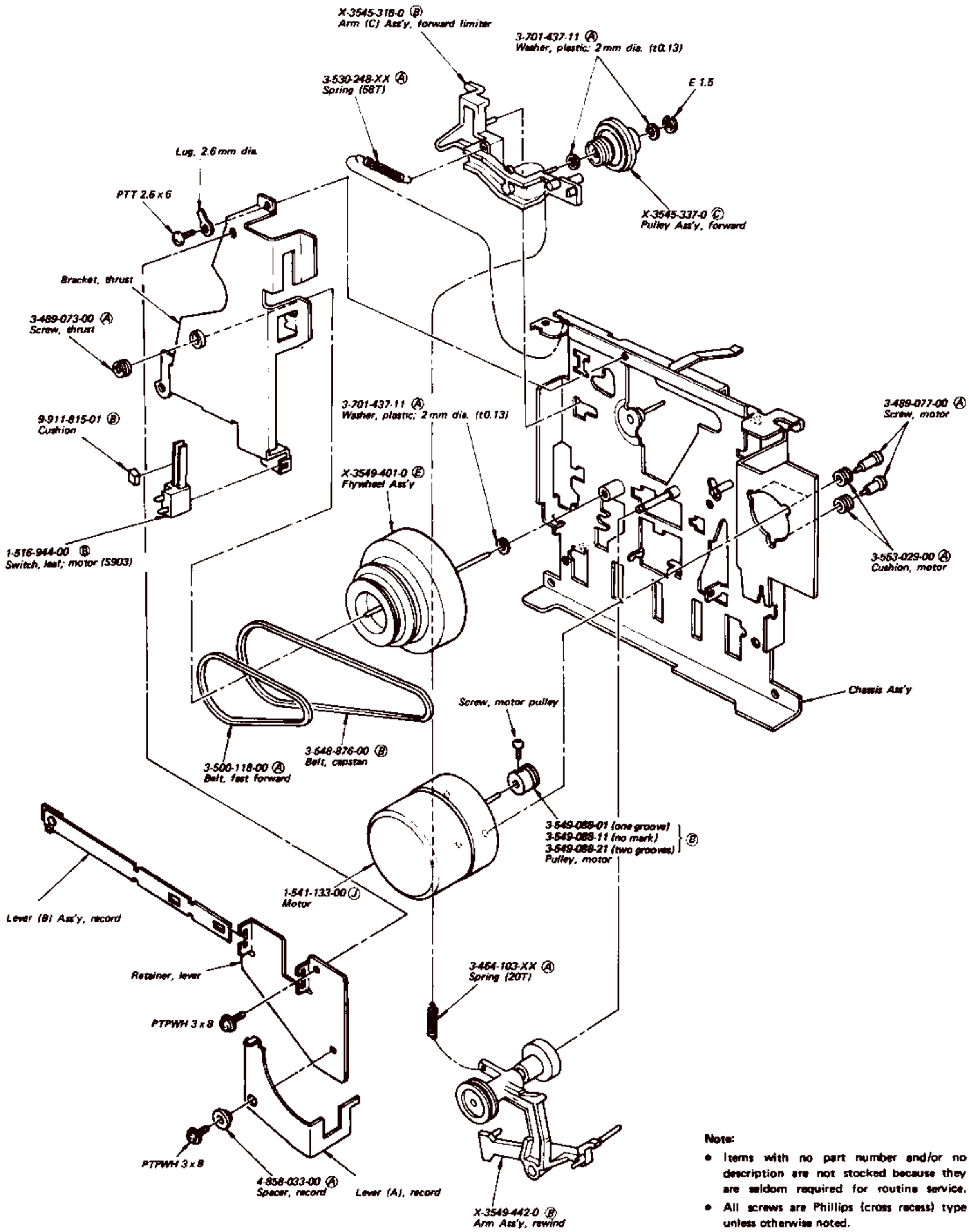

Note:

- Items with no part number and/or no description are not stocked because they are seldom required for routine service.
- All screws are Phillips (cross recess) type unless otherwise noted.
  (–) = slotted head
- (□□T) shows the number of coils in spring.
- Circled letters (Ⓐ to Ⓩ) are applicable to European models only.

A B C D

1 2 3 4 5

Note:

- Items with no part number and/or no description are not stocked because they are seldom required for routine service.
- All screws are Phillips (cross recess) type unless otherwise noted.
  (–) = slotted head
- (□□T) shows the number of coils in spring.
- Circled letters (Ⓐ to Ⓩ) are applicable to European models only.

(7)

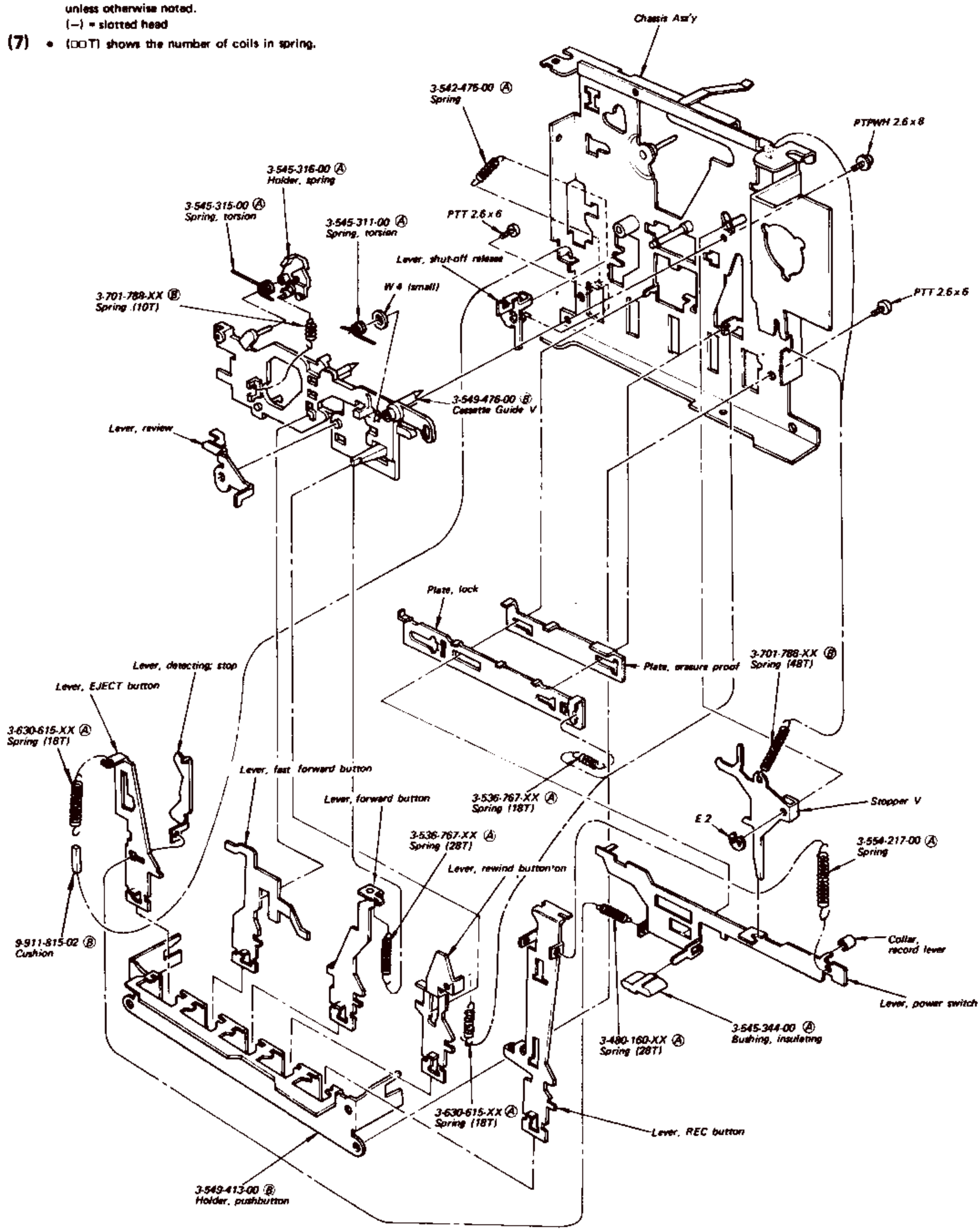

Note:

- Items with no part number and/or no description are not stocked because they are seldom required for routine service.
- All screws are Phillips (cross recess) type unless otherwise noted.
  (–) = slotted head
- (□□T) shows the number of coils in spring.
- Circled letters (Ⓐ to Ⓩ) are applicable to European models only.

(8)

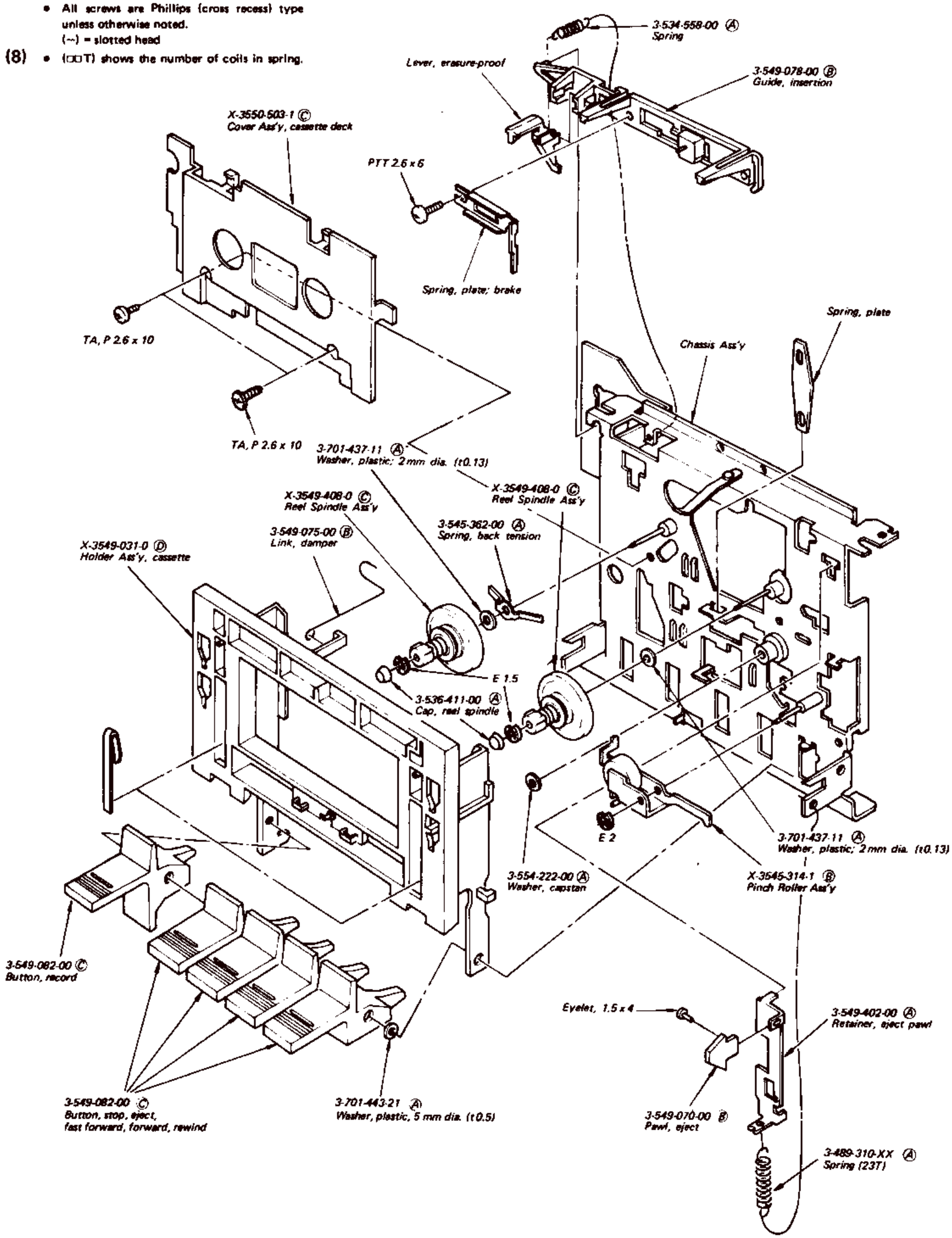

It's Free

SECTION 6

ELECTRICAL PARTS LIST

Note: Circled letters (Ⓐ to Ⓩ) are applicable to European models only.

Ref. No.	Part No.	Description
		SEMICONDUCTORS
		Transistors
⇒Q1–3	8-729-671-14	Ⓑ 2SC710–14
Q101	8-729-663-47	Ⓑ 2SC1364
⇒Q301, 401	8-729-665-47	Ⓑ 2SC1362
Q302	8-727-788-00	Ⓑ 2SA678
⇒Q901	8-729-316-12	Ⓓ 2SC1061
		ICs
IC101	8-751-680-01	Ⓘ CX168
IC201	8-759-833-50	Ⓕ LA3350
IC301	8-759-145-58	Ⓓ μPC4558C
⇒IC501, 601	8-759-313-51	Ⓖ HA1350S
		Diodes
D101–104, D201	8-719-815-55	Ⓑ 1S1555
D202, 301	8-719-901-31	Ⓑ SLP131B
⇒D901	8-719-500-34	Ⓒ S3VC40
⇒D902	8-719-200-02	Ⓑ 10E2
⇒D903	8-719-501-34	Ⓒ S3VC40R
⇒D904	8-719-931-25	Ⓑ EQB01-25
		COILS
L4	1-407-189-XX	Ⓐ 8.2 μH, microinductor
L51	1-405-813-00	Ⓑ LW Osc (AEP model)
	1-405-814-00	MW Osc (E model)
L52	1-405-814-00	Ⓑ MW Osc (AEP model)
	1-405-815-00	SW1 Osc (E model)
L53	1-405-812-00	Ⓑ SW Osc (AEP model)
	1-405-820-00	SW2 Osc (E model)
L54	1-401-742-11	MW Ferrite-rod Antenna (E model)
L54, 55	1-401-750-00	Ⓓ MW/LW Ferrite-rod Antenna (AEP model)
L55	1-401-745-00	SW1 Antenna (E model)
L56	1-401-741-00	Ⓑ SW Antenna (AEP model)
	1-401-746-00	SW2 Antenna (E model)
L57	1-401-749-00	Ⓑ LW Ext Antenna (AEP model)

⇒: Due to standardization, interchangeable replacements may be substituted for parts specified in the diagrams.

Ref. No.	Part No.	Description
L101	1-407-741-00	Ⓑ 18 μH, microinducter
L102	1-407-178-XX	Ⓐ 1 μH, microinductor
L301, 401	1-407-964-00	Ⓑ 33 mH, microinductor
L302	1-407-213-XX	Ⓑ 1.5 mH, microinductor
L303	1-433-202-00	Ⓑ Bias osc
		TRANSFORMERS
CFU101	1-403-827-00	Ⓒ AM IFT Triple Tune
T101	1-404-011-00	Ⓒ FM IFT
T901	⚠1-446-225-00	Power (E model)
	⚠1-446-228-00	Ⓛ Power (AEP model)
		CAPACITORS

All capacitors are in μF and ceramic unless otherwise noted.
50WV or less are not indicated except for electrolytics.
p : μμF, elect : electrolytic

Ref. No.	Part No.	Description		
C1	1-102-952-00	Ⓐ 16 p		
C2	1-102-949-00	Ⓐ 12 p		
C3	1-101-005-00	Ⓐ 0.022		
C4, 5	1-101-002-00	Ⓐ 0.0022		
C6	1-102-962-00	Ⓐ 30 p		
C7	1-101-081-00	Ⓐ 130 p		
C8	1-101-005-00	Ⓐ 0.022		
C9	1-101-982-00	Ⓐ 24 p		
C10	1-102-684-00	Ⓐ 8 p		
C11	1-101-978-00	Ⓐ 10 p		
C12	1-102-643-00	Ⓐ 27 p		
C13	1-101-586-00	Ⓐ 0.75 p		
C14, 15	1-101-005-00	Ⓐ 0.022		
C50	1-121-414-00	Ⓐ 100	6.3 V	elect
C52	1-121-391-00	Ⓐ 1	50 V	elect
C53	1-103-703-00	Ⓐ 120 p		polystyrol (AEP model)
	1-103-714-00	360 p		polystyrol (E model)
C54	1-103-714-00	Ⓐ 360 p		polystyrol (AEP model)
	1-103-729-00	1500 p		polystyrol (E model)
C55	1-103-739-00	Ⓑ 3900 p		polystyrol (AEP model)
	1-103-743-00	5600 p		polystyrol (E model)
C56	1-102-283-00	8 p (E model)		
	1-102-693-00	Ⓐ 39 p (AEP model)		

Note: The components identified by shading and mark ⚠ are critical for safety. Replace only with part number specified.

Note: Circled letters (Ⓐ to Ⓩ) are applicable to European models only.

Ref. No.	Part No.	Description			
C57	1-102-283-00	Ⓐ 8 p			
C58	1-102-295-00	18 p (E model)			
	1-102-253-00	Ⓐ 10 p (AEP model)			
C59	1-102-951-00	Ⓐ 15 p (AEP model)			
C60	1-102-961-00	27 p (E model)			
	1-102-958-00	Ⓐ 20 p (AEP model)			
C61	1-102-934-00	Ⓐ 1 p (AEP model)			
C62	1-102-942-00	Ⓐ 5 p			
C63	1-102-934-00	1 p (E model)			
C64	1-102-942-00	5 p (E model)			
C101	1-121-395-00	Ⓐ 4.7	25 V	elect	
C102, 103	1-101-925-00	Ⓐ 0.047			
C104	1-101-005-00	Ⓐ 0.022			
C105	1-121-751-00	Ⓑ 330	6.3 V	elect	
C106	1-121-450-00	Ⓐ 2.2	50 V	elect	
C107	1-121-651-00	Ⓐ 10	16 V	elect	
C108	1-107-085-00	Ⓐ 100 p silvered mica			
C109	1-121-651-00	Ⓐ 10	16 V	elect	
C110	1-121-352-00	Ⓐ 47	10 V	elect	
C111	1-161-043-00	Ⓐ 0.0022		(semiconductor)	
C112	1-121-726-00	Ⓐ 0.47	50 V	elect	
C113	1-101-002-00	Ⓐ 0.0022			
C114	1-121-391-00	Ⓐ 1	50 V	elect	
C115	1-121-651-00	Ⓐ 10	16 V	elect	
C116	1-101-925-00	Ⓐ 0.047			
C117	1-101-005-00	Ⓐ 0.022			
C118	1-121-651-00	Ⓐ 10	16 V	elect	
C119–125	1-101-005-00	Ⓐ 0.022			
C126	1-121-352-00	Ⓐ 47	10 V	elect	
C127	1-121-398-00	Ⓐ 10	25 V	elect	
C201	1-103-729-00	Ⓐ 1500 p		polystyrol	
C202	1-121-651-00	Ⓐ 10	16 V	elect	
C203	1-102-973-00	Ⓐ 100 p			
C204, 205	1-121-726-00	Ⓐ 0.47	50 V	elect	
C206	1-101-925-00	Ⓐ 0.047			
C207	1-121-409-00	Ⓐ 47	16 V	elect	
C208	1-121-391-00	Ⓐ 1	50 V	elect	

Ref. No.	Part No.	Description			
C209, 210	1-161-018-00	Ⓐ 0.027		(semiconductor)	
C211, 212	1-121-726-00	Ⓐ 0.47	50 V	elect	
C301, 401	1-108-595-00	Ⓐ 0.047		mylar	
C302, 402	1-108-228-00	Ⓐ 0.0015		mylar	
C303	1-121-245-00	Ⓑ 1000	16 V	elect	
C304, 404	1-102-074-00	Ⓐ 0.001			
C305, 405	1-108-251-00	Ⓐ 0.1		mylar	
C306, 406	1-121-391-00	Ⓐ 1	50 V	elect	
C307, 407	1-121-915-00	Ⓑ 4.7	25 V	elect	
C308, 408	1-121-402-00	Ⓐ 33	10 V	elect	
C309, 409	1-108-237-00	Ⓐ 0.0068		mylar	
C310, 410	1-108-239-00	Ⓐ 0.01		mylar	
C311, 411	1-108-230-00	Ⓐ 0.0022		mylar	
C312, 412, C313, 413	1-108-351-00	Ⓐ 0.0012		mylar	
C314, 414	1-102-815-00	Ⓐ 110 p			
C315, 415	1-101-881-00	Ⓐ 47 p			
C316, 317	1-121-395-00	Ⓐ 4.7	25 V	elect	
C318	1-108-237-00	Ⓐ 0.0068		mylar	
C319	1-102-074-00	Ⓐ 0.001			
C320	1-108-409-00	Ⓐ 0.001	200 V	mylar	
C321	1-108-415-00	Ⓐ 0.0033	200 V	mylar	
C322	1-108-419-00	Ⓐ 0.0068	200 V	mylar	
C323, 423	1-102-123-00	Ⓐ 0.0033			
C324, 424	1-121-391-00	Ⓐ 1	50 V	elect	
C325, 425	1-102-975-00	Ⓐ 100 p			
C501, 601	1-108-239-00	Ⓐ 0.01		mylar	
C502, 602	1-121-726-00	Ⓐ 0.47	50 V	elect	
C503, 603	1-121-413-00	Ⓐ 100	6.3 V	elect	
C504, 604	1-108-591-00	Ⓐ 0.033		mylar	
C505, 605	1-108-252-00	Ⓑ 0.15		mylar	
C506, 606	1-108-567-00	Ⓐ 0.0033		mylar	
C507, 607	1-108-242-00	Ⓐ 0.022		mylar	
C508, 608	1-102-117-00	Ⓐ 820 p			
C509, 609	1-102-962-00	Ⓐ 30 p			
C510	1-101-006-00	Ⓐ 0.047			
C511, 611	1-101-005-00	Ⓐ 0.022			
C512	1-101-006-00	Ⓐ 0.047			

6. SCHEMATIC DIAGRAM (E model)

: changed portion

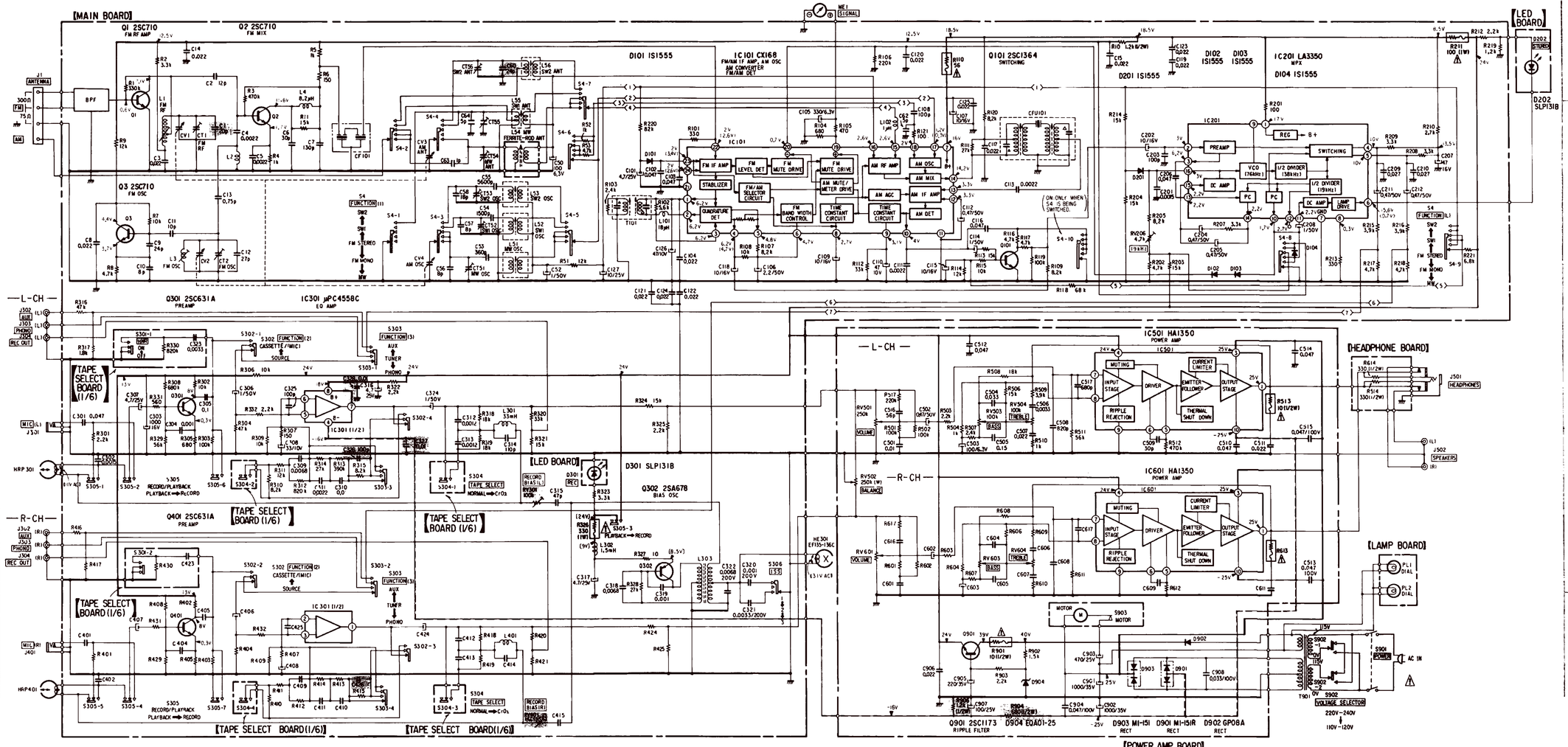

Note:

- Components for right channel have same values as for left channel.
- All capacitors are in μF unless otherwise noted. pF : μμF 50 WV or less are not indicated except for electrolytics.
- All resistors are in ohms, ¼W unless otherwise noted. kΩ : 1000 Ω, MΩ : 1000 kΩ
- All variable and adjustable resistors have characteristic curve B, unless otherwise noted.
- : fusible resistor.
- △ : internal component.
- ——— : B+ bus.
- - - - : B− bus.
- ▭ : panel designation.
- ▭ : adjustment for repair.
- Voltages are dc with respect to ground unless otherwise noted.
- Readings are taken under no signal (detuned) condictions with a VOM (20 kΩ/V).
  ( ) : AM
  [ ] : record
  < > : LED (D202) : ON
  (( )) : record (with VTVM)
- Voltage variations may be noted due to normal production tolerances.
- Switch

Ref. No.	Switch	Position
S4-1 to 4-10	FUNCTION (1)	FM STEREO
S301-1, 2	HNR	OFF
S302-1 to 302-4	FUNCTION (2)	SOURCE
S303-1 to 303-4	FUNCTION (3)	TUNER
S304-1 to 304-4	TAPE SELECT	NORMAL
S305-1 to 305-7	RECORD/ PLAYBACK	PLAYBACK
S306	ISS	1
S901	POWER	OFF
S902	VOLTAGE SELECTOR	220 V–240 V
S903	MOTOR	OFF

Note: The components identified by shading and mark ⚠ are critical for safety. Replace only with part number specified.

5. MOUNTING DIAGRAM (E model)

– *Conductor Side* –

[ ]: changed portion

Replacement Semiconductors: See page 3.

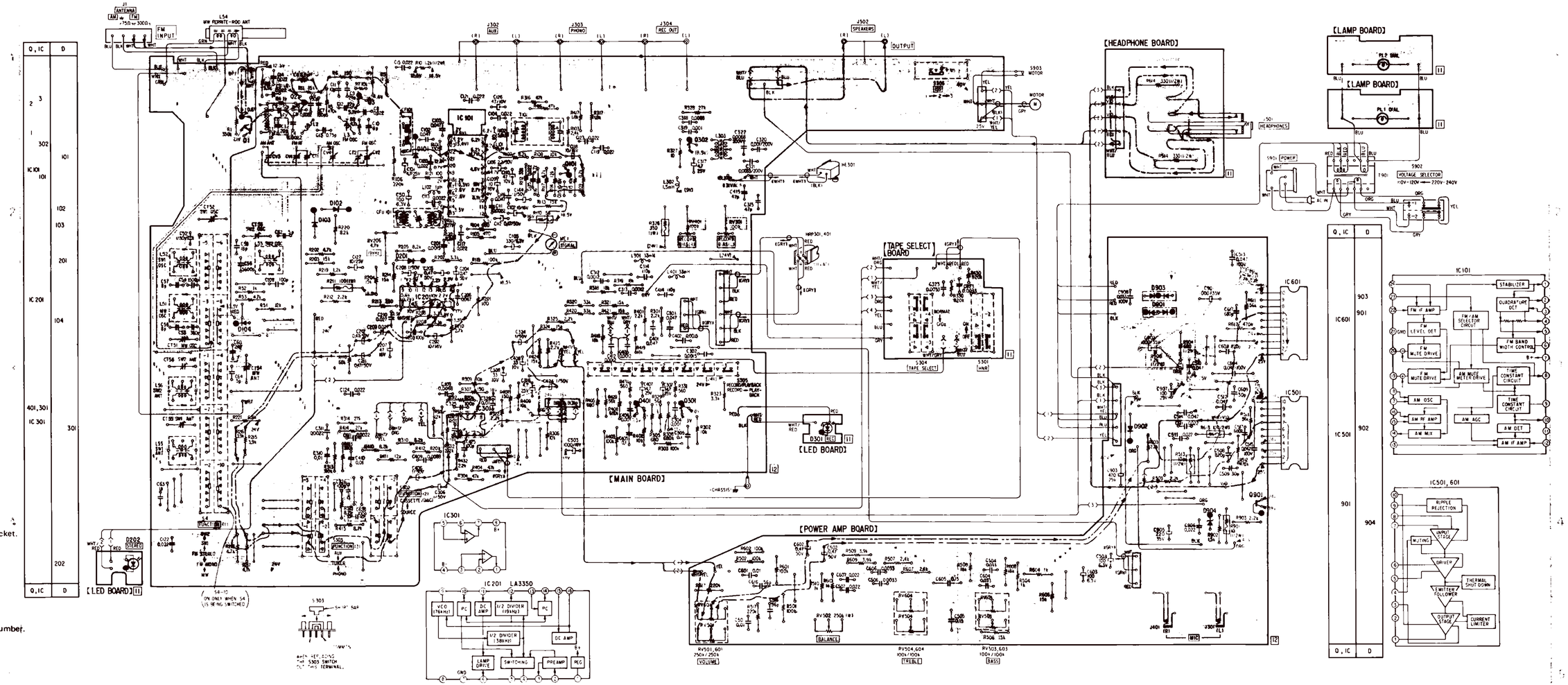

Note:

- Color code of sleeving over the end of the jacket.

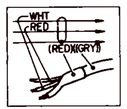

- [ ]: indicates side identified with part number.
- : B+ pattern
- Signal Path
  - —→ : L-CH audio
  - —→ : R-CH audio
  - —→ : FM or common

4. SCHEMATIC DIAGRAM (AEP model)

changed portion

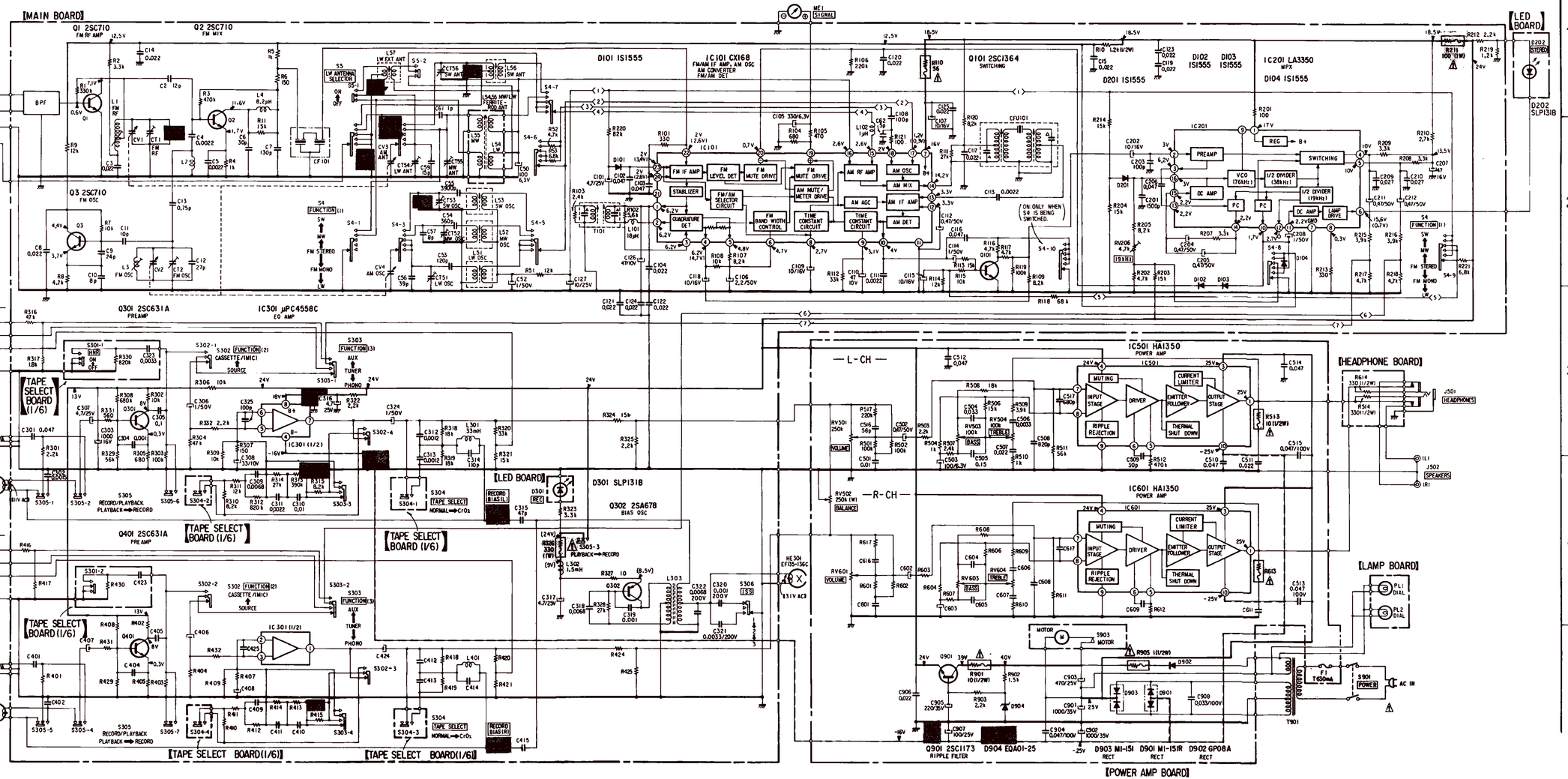

Note:

- Components for right channel have same values as for left channel.
- All capacitors are in μF unless otherwise noted. pF : μμF 50 WV or less are not indicated except for electrolytics.
- All resistors are in ohms, ¼W unless otherwise noted. kΩ : 1000 Ω, MΩ : 1000 kΩ
- All variable and adjustable resistors have characteristic curve B, unless otherwise noted.
- : fusible resistor.
- △ : internal component.
- ——— : B+ bus.
- - - - : B− bus.
- ▭ : panel designation.
- ▭ : adjustment for repair.
- Voltages are dc with respect to ground unless otherwise noted.
- Readings are taken under no signal (detuned) condictions with a VOM (20 kΩ/V).
  ( ) : AM
  [ ] : record
  < > : LED (D202): ON
  (( )) : record (with VTVM)
- Voltage variations may be noted due to normal production tolerances.
- Switch

Ref. No.	Switch	Position
S4-1 to 4-10	FUNCTION (1)	FM STEREO
S301-1, 2	HNR	OFF
S302-1 to 302-4	FUNCTION (2)	SOURCE
S303-1 to 303-4	FUNCTION (3)	TUNER
S304-1 to 304-4	TAPE SELECT	NORMAL
S305-1 to 305-7	RECORD/ PLAYBACK	PLAYBACK
S306	ISS	1
S901	POWER	OFF
S902	VOLTAGE SELECTOR	220 V–240 V
S903	MOTOR	OFF

Note: The components identified by shading and mark ⚠ are critical for safety. Replace only with part number specified.

3. MOUNTING DIAGRAM (AEP model)

– Conductor Side –

[ ] : changed portion

Replacement Semiconductors: See page 3.

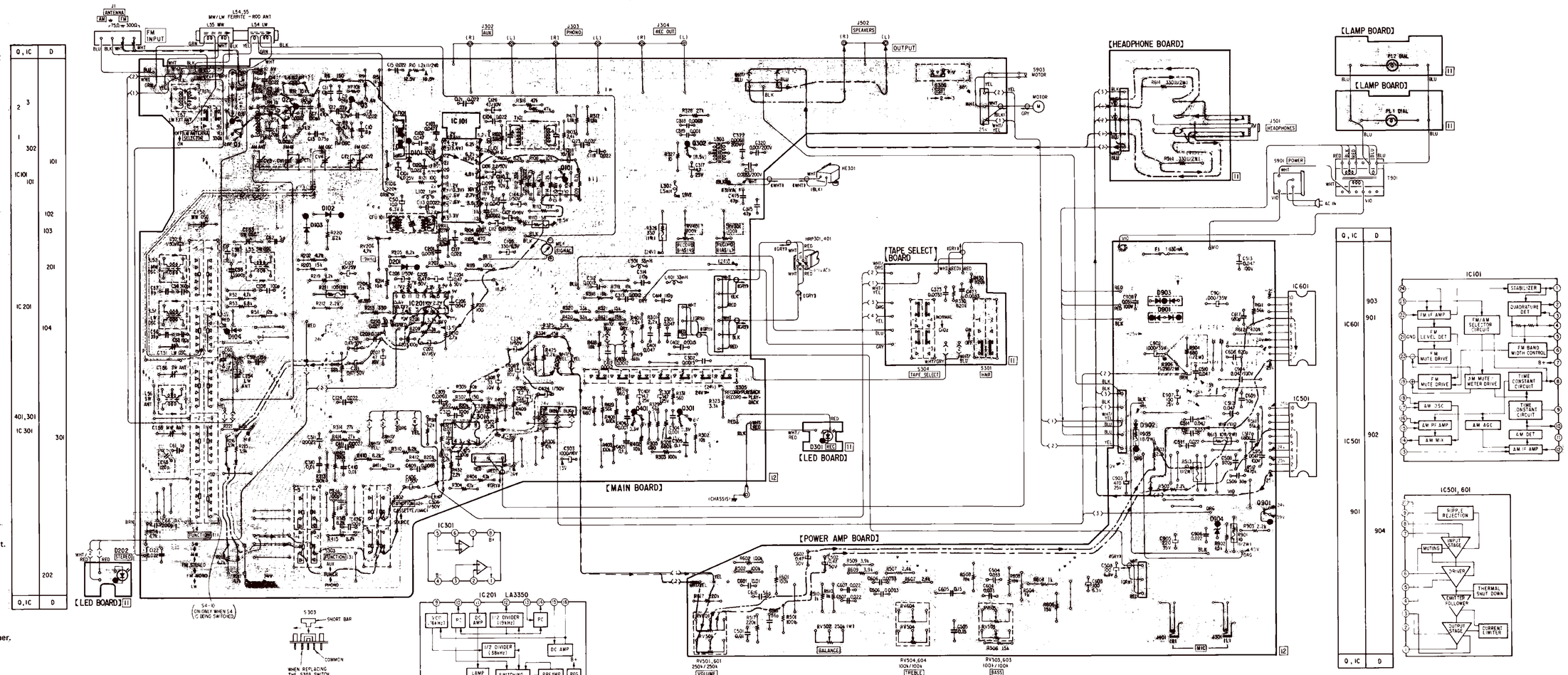

Note:

- Color code of sleeving over the end of the jacket.

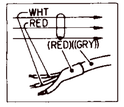

- [ ] : indicates side identified with part number.
- : B+ pattern
- Signal Path
  - —·—▶ : L-CH audio
  - —··—▶ : R-CH audio
  - — — ▶ : FM or common

2. INTERCHANGEABLITY

The former and new circuit boards are interchangeable.

- **Replacement Semiconductors**

For replacement, use semiconductors except in ( ).

Q1–3 : 2SC710-14 (2SC710)

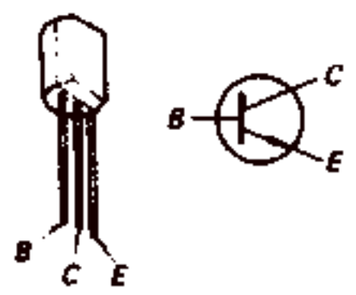

IC501, 601 : HA1350S (HA1350)

Q101 : 2SC1364
Q301, 401 : 2SC1362

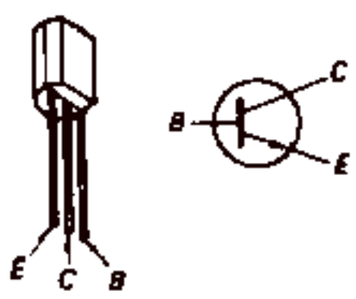

(2SC631A)

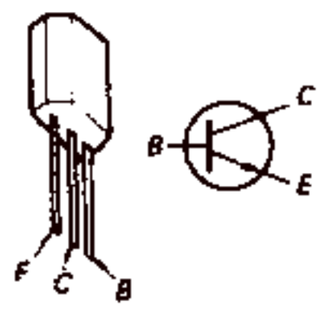

D101–104
D201 } **: 1S1555**

D902 : 10E2 (GP08A)

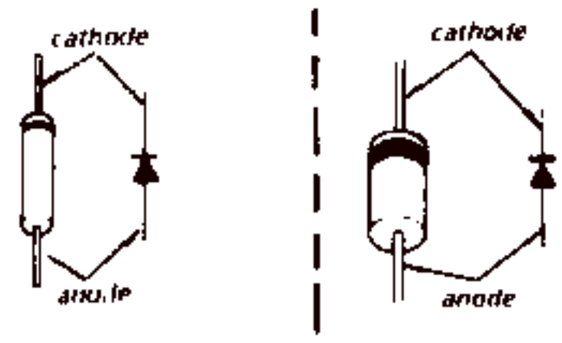

Q302 : 2SA678

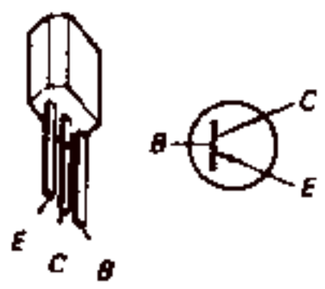

D202, 301 : SLP131B

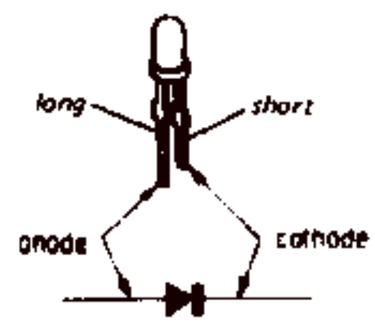

Q901 : 2SC1061 (2SC1173)

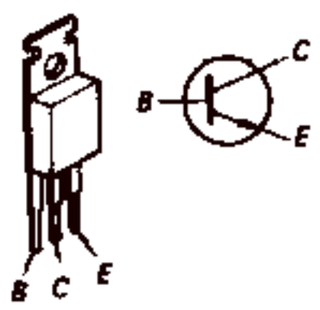

D901 : S3VC40 (MI-151R)

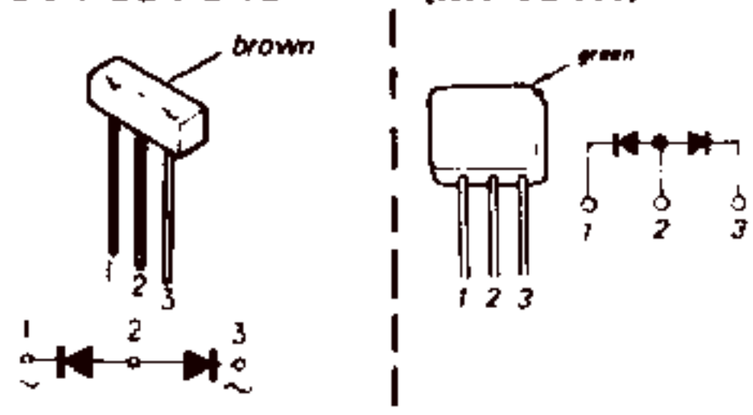

IC101 : CX168

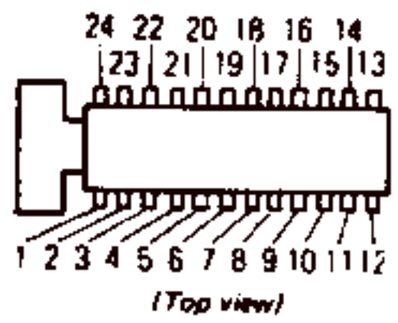

D903 : S3VC40R (MI-151)

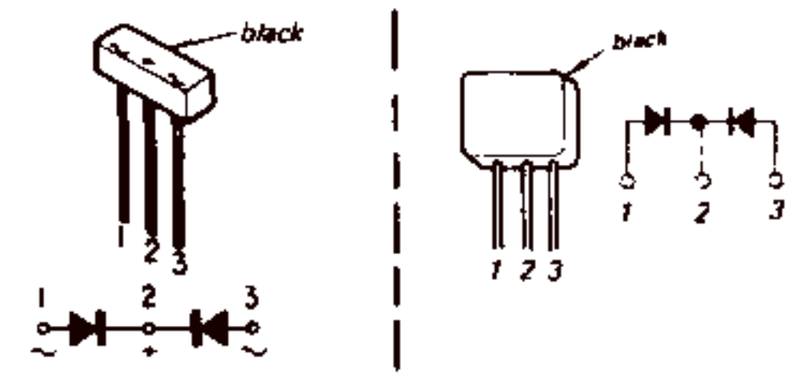

IC201 : LA3350

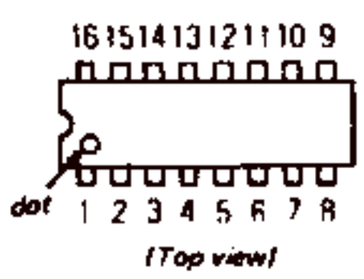

D904 : EQB01-25 (EQA01-25)

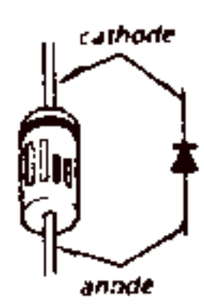

IC301 : μPC4558C

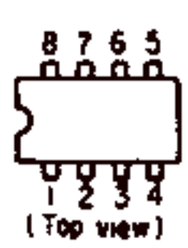

1. CHANGED PARTS LIST

- Circled letters (Ⓐ to Ⓩ) are applicable to European models only.

AEP model

Ref. No.	Former Part No./Part Value	New Part No./Part Value
C1	1-102-952-00 Ⓐ 16 p	1-102-958-00 Ⓐ 20 p
C58	1-102-253-00 Ⓐ 10 p	1-102-283-00 Ⓐ 8 p
C60	1-102-958-00 Ⓐ 20 p	1-102-951-00 Ⓐ 15 p
C65	————	1-102-816-21 Ⓐ 120 p
C66	————	1-102-977-21 Ⓐ 200 p
C326, 426	————	1-102-973-00 Ⓐ 100 p
C327, 328	————	1-101-004-00 Ⓐ 0.01
R54	————	1-246-489-00 Ⓐ 4.7 k ¼ W carbon
R904	————	1-244-869-00 Ⓐ 680 ½ W carbon
R906	————	1-244-875-00 Ⓐ 1.2 k ½ W carbon
RV301, 401	1-226-240-00 Ⓐ 220 k (B), adjustable; record bias	1-226-239-00 Ⓐ 100 k (B), adjustable; record bias

E model

Ref. No.	Former Part No./Part Value	New Part No./Part Value
C1	1-102-952-00 16 p	1-102-958-00 20 p
C60	1-102-961-00 27 p	1-102-960-00 24 p
C326, 426	————	1-102-973-00 100 p
C327, 328	————	1-101-004-00 0.01
R904	————	1-244-869-00 680 ½ W carbon
R906	————	1-244-875-00 1.2 k ½ W carbon
RV301, 401	1-226-240-00 220 k (B), adjustable; record bias	1-226-239-00 100 k (B), adjustable; record bias

STEREO CASSETTE-RECEIVER

HST-39

Ned. Ver. v. Historie v/d Radio

ARCHIEF
DOCUMENTATIEDIENST
NVHR

AEP Model
E Model

No. 1
Jan. 1979

SUPPLEMENT

Subject: Printed Circuit Board Modification

This supplement updates the service manual to include the production changes of the main circuit board and the power amp circuit board.
File this supplement with the service manual.

SONY®
SERVICE MANUAL

1/4 WATT CARBON RESISTORS Ⓐ

Note: Circled letter Ⓐ is applicable to European models only.

Ω	Part No.	Ω	Part No.	Ω	Part No.	Ω	Part No.	Ω	Part No.	Ω	Part No.	Ω	Part No.
1.0	1-246-401-00	10	1-246-425-00	100	1-246-449-00	1.0k	1-246-473-00	10k	1-246-497-00	100k	1-246-521-00	1.0M	1-246-545-00
1.1	1-246-402-00	11	1-246-426-00	110	1-246-450-00	1.1k	1-246-474-00	11k	1-246-498-00	110k	1-246-522-00	1.1M	1-210-814-00
1.2	1-246-403-00	12	1-246-427-00	120	1-246-451-00	1.2k	1-246-475-00	12k	1-246-499-00	120k	1-246-523-00	1.2M	1-210-815-00
1.3	1-246-404-00	13	1-246-428-00	130	1-246-452-00	1.3k	1-246-576-00	13k	1-246-500-00	130k	1-246-524-00	1.3M	1-210-816-00
1.5	1-246-405-00	15	1-246-429-00	150	1-246-453-00	1.5k	1-246-577-00	15k	1-246-501-00	150k	1-246-525-00	1.5M	1-210-817-00
1.6	1-246-406-00	16	1-246-430-00	160	1-246-454-00	1.6k	1-246-578-00	16k	1-246-502-00	160k	1-246-526-00	1.6M	1-210-818-00
1.8	1-246-407-00	18	1-246-431-00	180	1-246-455-00	1.8k	1-246-579-00	18k	1-246-503-00	180k	1-246-527-00	1.8M	1-210-819-00
2.0	1-246-408-00	20	1-246-432-00	200	1-246-456-00	2.0k	1-246-580-00	20k	1-246-504-00	200k	1-246-528-00	2.0M	1-210-820-00
2.2	1-246-409-00	22	1-246-433-00	220	1-246-457-00	2.2k	1-246-581-00	22k	1-246-505-00	220k	1-246-529-00	2.2M	1-210-821-00
2.4	1-246-410-00	24	1-246-434-00	240	1-246-458-00	2.4k	1-246-582-00	24k	1-246-506-00	240k	1-246-530-00	2.4M	1-244-754-00
2.7	1-246-411-00	27	1-246-435-00	270	1-246-459-00	2.7k	1-246-583-00	27k	1-246-507-00	270k	1-246-531-00	2.7M	1-244-755-00
3.0	1-246-412-00	30	1-246-436-00	300	1-246-460-00	3.0k	1-246-584-00	30k	1-246-508-00	300k	1-246-532-00	3.0M	1-244-756-00
3.3	1-246-413-00	33	1-246-437-00	330	1-246-461-00	3.3k	1-246-585-00	33k	1-246-509-00	330k	1-246-533-00	3.3M	1-244-757-00
3.6	1-246-414-00	36	1-246-438-00	360	1-246-462-00	3.6k	1-246-586-00	36k	1-246-510-00	360k	1-246-534-00	3.6M	1-244-758-00
3.9	1-246-415-00	39	1-246-439-00	390	1-246-463-00	3.9k	1-246-587-00	39k	1-246-511-00	390k	1-246-535-00	3.9M	1-244-759-00
4.3	1-246-416-00	43	1-246-440-00	430	1-246-464-00	4.3k	1-246-488-00	43k	1-246-512-00	430k	1-246-536-00	4.3M	1-244-760-00
4.7	1-246-417-00	47	1-246-441-00	470	1-246-465-00	4.7k	1-246-489-00	47k	1-246-513-00	470k	1-246-537-00	4.7M	1-244-761-00
5.1	1-246-418-00	51	1-246-442-00	510	1-246-466-00	5.1k	1-246-490-00	51k	1-246-514-00	510k	1-246-538-00	5.1M	1-244-762-00
5.6	1-246-419-00	56	1-246-443-00	560	1-246-467-00	5.6k	1-246-491-00	56k	1-246-515-00	560k	1-246-539-00		
6.2	1-246-420-00	62	1-246-444-00	620	1-246-468-00	6.2k	1-246-492-00	62k	1-246-516-00	620k	1-246-540-00		
6.8	1-246-421-00	68	1-246-445-00	680	1-246-469-00	6.8k	1-246-493-00	68k	1-246-517-00	680k	1-246-541-00		
7.5	1-246-422-00	75	1-246-446-00	750	1-246-470-00	7.5k	1-246-494-00	75k	1-246-518-00	750k	1-246-542-00		
8.2	1-246-423-00	82	1-246-447-00	820	1-246-471-00	8.2k	1-246-495-00	82k	1-246-519-00	820k	1-246-543-00		
9.1	1-246-424-00	91	1-246-448-00	910	1-246-472-00	9.1k	1-246-496-00	91k	1-246-520-00	910k	1-246-544-00		

HARDWARE NOMENCLATURE

Screw: – P 3 x 10

- *L: Length in mm*
- *D: Diameter in mm*
- *Type of head*
- *Indicated slotted-head only. Unless otherwise indicated, it means cross-recessed head (Phillips type).*

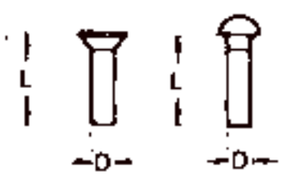

Nut, Washer, Retaining ring: N 3

- *Diameter of usable screw or shaft*
- *Reference designation*

Reference Designation	Shape	Description	Remarks
		SCREWS	
P		pan-head screw	binding-head (B) screw for replacement
PWH		pan-head screw with washer face	binding-head (B) screw and flat washer for replacement
PS PSP		pan-head screw with spring washer	binding-head (B) screw and spring washer for replacement
PSW PSPW		pan-head screw with spring and flat washers	binding-head (B) screw and spring and flat washers for replacement
R		round-head screw	binding-head (B) screw for replacement
K		flat-countersunk-head screw	
RK		oval-countersunk-head screw	
B		binding-head screw	
T		truss-head screw	binding-head (B) screw for replacement
F		flat-fillister-head screw	
RF		fillister-head screw	
BV		braizer-head screw	

Reference Designation	Shape	Description	Remarks
		SELF-TAPPING SCREWS	
TA		self-tapping screw	ex: TA, P 3 x 10
PTP		pan-head self-tapping screw	binding-head self-tapping (TA, B) screw for replacement
PTPWH		pan-head self-tapping screw with washer face	binding-head self tapping (TA, B) screw and flat washer for replacement
PTTWH		pan-head thread-rolling screw with washer face	binding-head (B) screw and flat washer for replacement
		SET SCREWS	
SC		set screw	
SC		hexagon-socket set screw	ex: SC 2.6 x 4, hexagon socket
		NUT	
N		nut	
		WASHERS	
W		flat washer	
SW		spring washer	
LW		internal-tooth lock washer	ex: LW3, internal
LW		external-tooth lock washer	ex: LW3, external
		RETAINING RINGS	
E		retaining ring	
G		grip-type retaining ring	

Sony Corporation

9-958-559-01

78J0549-1

Printed in Japan

© 1978

Note: Circled letters (Ⓐ to Ⓩ) are applicable to European models only.

ACCESSORIES & PACKING MATERIALS

Part No.	*Description*	*Part No.*	*Description*
X-3701-105-0	Tips Ass'y, head cleaning (E model)		
1-501-161-00	Ⓕ Antenna, feeder	4-858-084-00	Ⓑ Cushion, upper
1-534-492-00	Ⓒ Cord, antenna	4-858-085-00	Ⓑ Cushion, lower; left
3-701-630-00	Ⓐ Bag, plastic	4-858-086-00	Ⓑ Cushion, lower; right
3-770-626-51	Ⓒ Manual, instruction	4-858-087-00	Ⓔ Carton
4-858-078-00	Ⓑ Sheet, protection	4-859-912-00	Ⓐ Bag, plastic

Note: Circled letters (Ⓐ to Ⓩ) are applicable to European models only.

Ref. No.	Part No.	Description			
C513	1-108-385-00	Ⓐ 0.047	100 V	mylar	
C514	1-101-006-00	Ⓐ 0.047			
C515	1-108-385-00	Ⓐ 0.047	100 V	mylar	
C516, 616	1-101-884-00	Ⓐ 56 p			
C517, 617	1-102-116-00	Ⓐ 680 p			
C901, 902	1-121-388-00	Ⓒ 1000	35 V	elect	
C903	1-121-733-00	Ⓑ 470	25 V	elect	
C904	1-108-385-00	Ⓐ 0.047	100 V	mylar	
C905	1-121-261-00	Ⓑ 220	35 V	elect	
C906	1-101-005-00	Ⓐ 0.022			
C907	1-121-417-00	Ⓑ 100	25 V	elect	
C908	1-108-383-00	Ⓐ 0.033	100 V	mylar	
CT1, 2 CV1–4	1-151-345-00	Ⓖ Tuning			
CT51–56	1-141-138-XX	Ⓐ Trimmer			

RESISTORS

- All resistors are in ohms. Common ¼W carbon resistors are omitted. Refer to the list on the last page for their part numbers.

R110	**⚠1-212-875-00**	**Ⓐ 56**	**¼W**	**fusible**	
R211	**⚠1-213-084-00**	**Ⓐ 100**	**1 W**	**fusible**	
R326	**⚠1-213-096-00**	**Ⓐ 330**	**1 W**	**fusible**	
R513, 613	**⚠1-212-958-00**	**Ⓐ 10**	**½W**	**fusible**	
R514, 614	1-244-861-00	Ⓐ 330	½W	carbon	
R901	**⚠1-212-958-00**	**Ⓐ 10**	**½W**	**fusible**	
R905	**⚠1-212-934-00**	**Ⓐ 1**	**½W**	**fusible (AEP model)**	
RV206	1-226-235-00	Ⓐ 4.7 k (B), adjustable; 19 kHz			
RV301, 401	1-226-240-00	Ⓐ 220 k (B), adjustable; record bias			
RV501, 601	1-226-316-00	Ⓒ 250 k/250 k (B), variable; VOLUME			
RV502	1-226-367-00	Ⓑ 250 k (W), variable; BALANCE			
RV503, 504 RV603, 604	1-226-323-00	Ⓒ 100 k/100 k (B), variable; BASS, TREBLE			

Ref. No.	Part No.	Description
		SWITCHES
S4	1-552-596-00	Ⓔ Rotary-slide, FUNCTION (1)
S5	1-516-927-00	Ⓑ Pushbutton, LW ANTENNA SELECTOR (AEP model)
S301	1-552-594-00	Ⓒ Slide, HNR
S302	1-552-548-00	Ⓒ Slide, FUNCTION (2)
S303	1-552-551-00	Ⓒ Slide, FUNCTION (3)
S304	1-552-593-00	Ⓒ Slide, TAPE SELECT
S305	1-552-595-00	Ⓒ Slide, record/playback
S306	1-516-870-00	Ⓑ Slide, ISS
S901	**⚠1-552-531-00**	**Ⓒ Pushbutton, POWER**
S902	**⚠1-552-535-00**	**VOLTAGE SELECTOR (E model)**
S903	1-516-944-00	Ⓑ Leaf, motor
		JACKS
J301, 401	1-507-605-00	Ⓑ MIC
J302–304	1-507-500-00	Ⓑ REC OUT, AUX, PHONO
J501	1-507-606-00	Ⓒ HEADPHONES
J502	1-507-500-00	Ⓑ Phono, SPEAKERS
		MISCELLANEOUS
BPF	1-231-313-00	Ⓑ Bandpass Filter
CF101	1-517-248-XX	Ⓗ 10.7 MHz Ceramic Filter
F1	**⚠1-532-284-00**	**Ⓑ Fuse, T630 mA (AEP model)**
HE301	8-825-634-00	Ⓒ Head, erase; EF135-136C
HRP301, 401	1-543-132-00	Ⓘ Head, record/playback
J1	1-536-560-00	Ⓑ Terminal Strip, ANTENNA
M	1-541-133-00	Ⓙ Motor
ME1	1-520-341-21	Ⓕ Meter, SIGNAL
PL1, 2	1-518-323-00	Ⓑ Lamp, pilot 13 V 200 mA; dial
	⚠1-551-530-00	**Cord, power; euro-plug (E model)**
	⚠1-551-188-41	**Cord, power; parallel-blade plug (E model)**
	⚠1-534-817-XX	**Ⓓ Cord, power (AEP model)**
	⚠1-533-131-00	**Ⓐ Holder, fuse (AEP model)**

Note: The components identified by shading and mark ⚠ are critical for safety. Replace only with part number specified.

Sony Corporation
© 1979

9-958-559-81
79A0549-1
Printed in Japan