Service
Service
Service

Service Manual

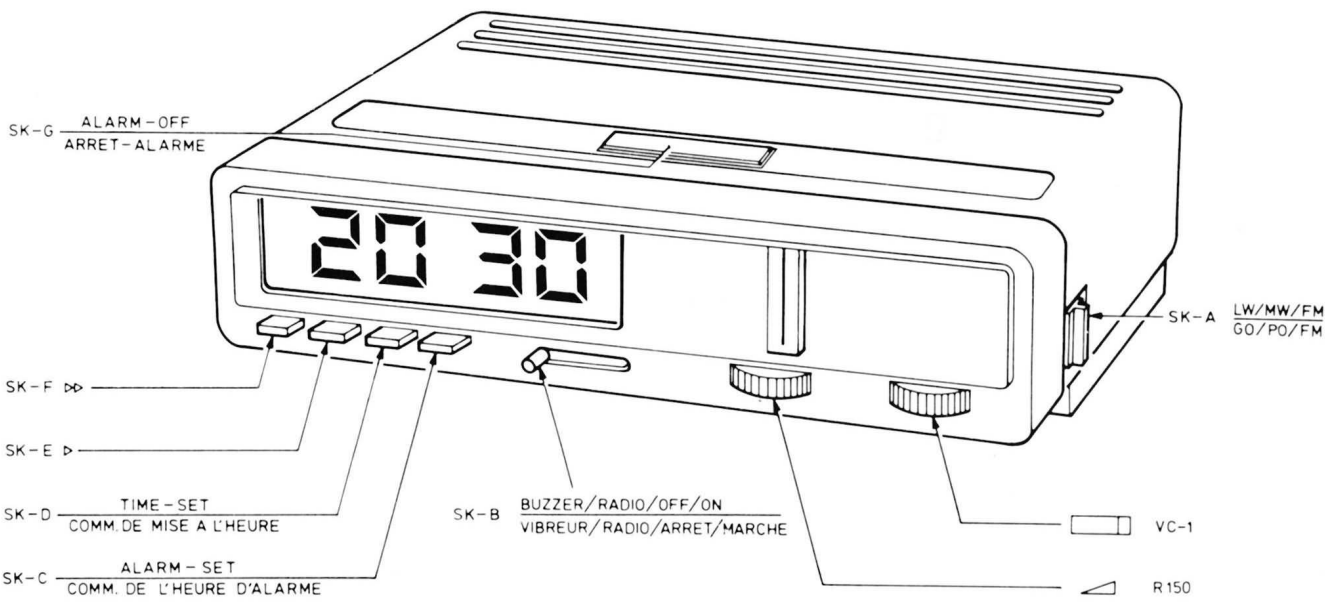

LW/GO	: 150 – 255 kHz (2000 – 1177 m)	MAINS/SECTEUR	: 220V~ 50Hz, 110V~60Hz
MW/PO	: 520 – 1605 kHz (577 – 187 m)	OUTPUT/SORTIE	: 200 mW ± 1dB (d = 10 %)
FM	: 87.5 – 104 MHz	CLOCK	: 24 Hrs
IF – AM	: 468 kHz		
IF – FM	: 10.7 MHz		

17165 B 12

Documentation Technique Service Dokumentation Documentazione di Servizio Huolte-Ohje Manual de Servicio Manual de Serviço

Subject to modification
4822 725 13305
Printed in The Netherlands

PHILIPS

ALIGNMENT

Wave range SK-A	Signal to		Var.cap.	Adjust	
MW (PO) 520-1605 kHz	468 kHz via 10 nF	A	Min.cap.	S106 S105	1 Max.
	512 kHz	B	Max.cap.	L107	2 Max.
	1635 kHz		Min.cap.	CT104	
	600 kHz		Tune in	L106	
	1400 kHz			CT103	
LW (GO) 150-255 kHz	250 kHz	B	Tune in	L108	1 Max.
FM 87,5-104 MHz	10,7 MHz via 10 nF	C	Min.cap.	S104 S103 S102 S101	1 Max.
	86,5 MHz	D	Max.cap.	L105	1 Max.
	105 MHz		Min.cap.	CT102	
	90 MHz		Tune in	L102	
	103 MHz			CT101	

↕ Repeat - Herhalen - Répéter - Wiederholen - Ricomminciare - Repetera - Gentage - Gjentagelse - Toista

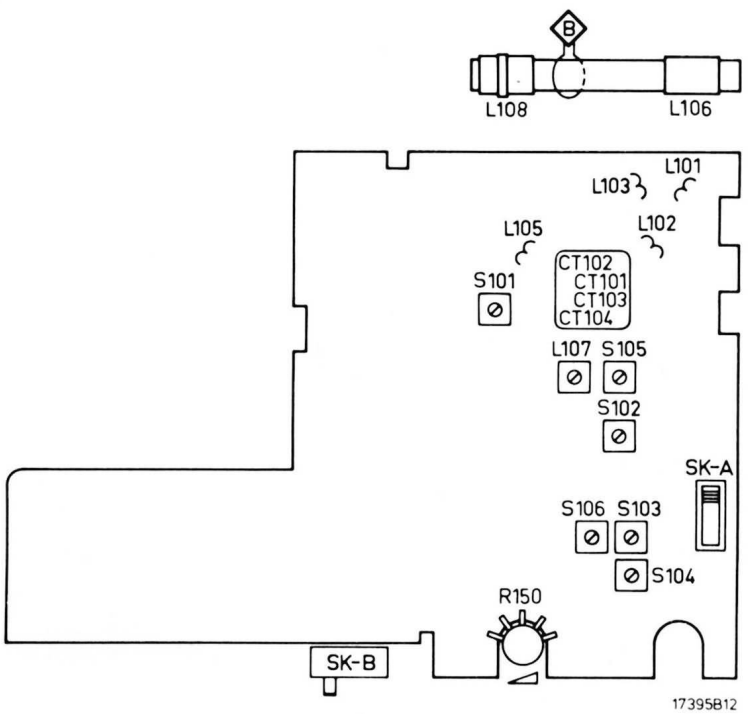

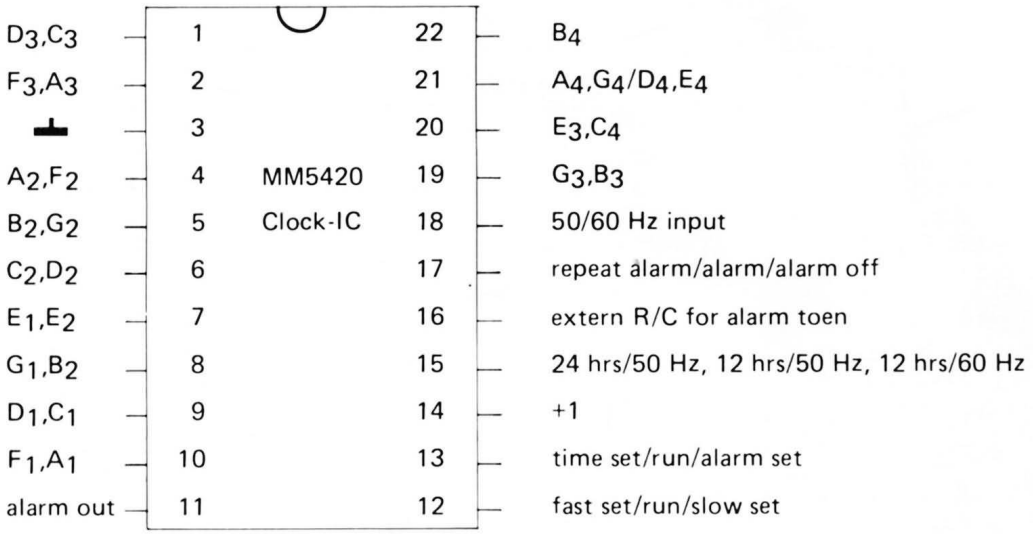

P.15 connected to:	+1	Open	
Clock mode	24 Hrs - 50 Hz	12 Hrs - 50 Hz	12 Hrs - 60 Hz

DISPLAY CHECK

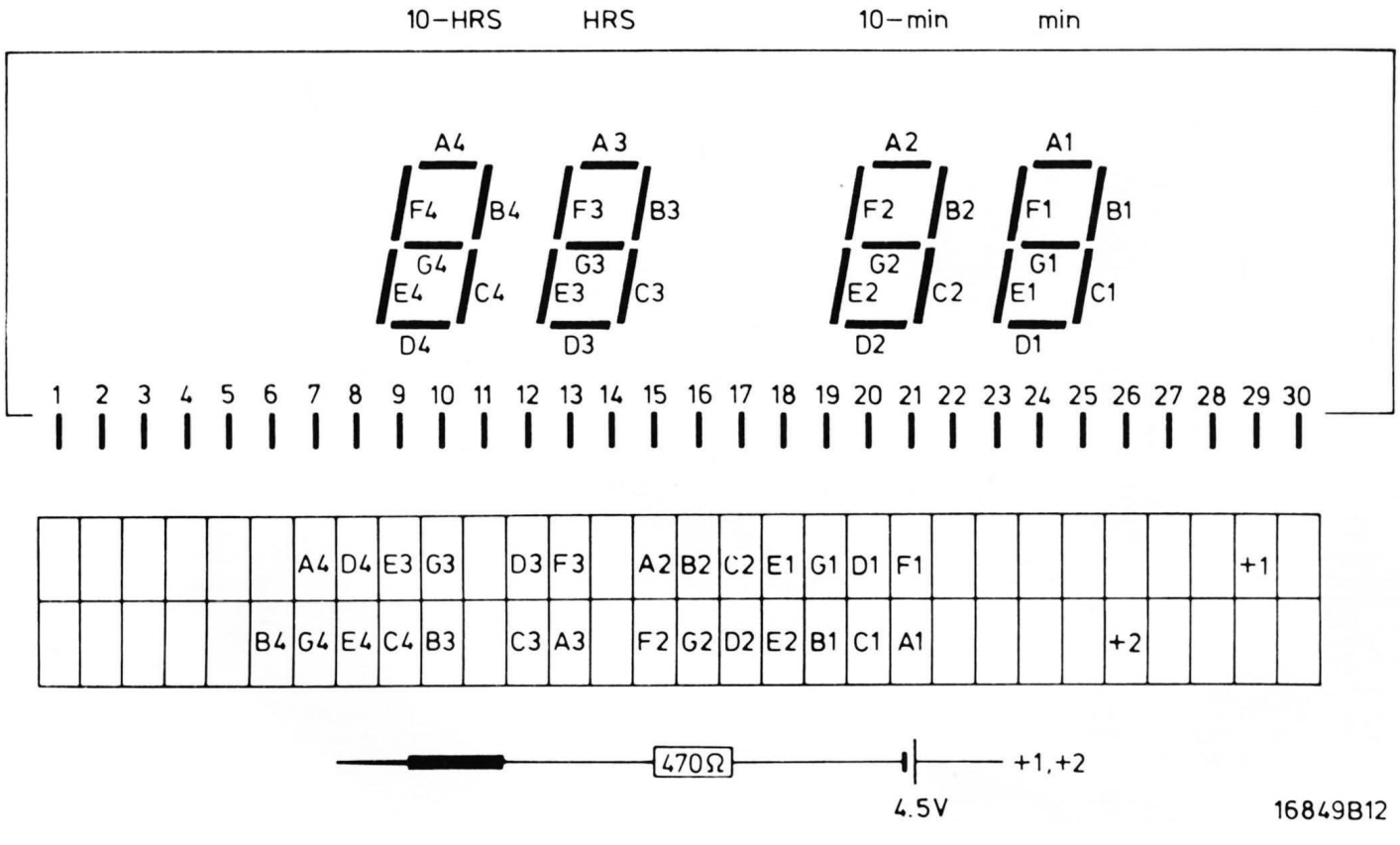

MISC.		SK-A		TS101	D101.D106.TS104	D107.TS105.D108.TS102.D103.D102.TS103.D109.TS106÷TS109.D105.D104.F1	.D110–D113.TS201		D206		CD201	IC201		D201	
	S–L		L101	L102	L103	S102÷S106	L107	L104 L105	S101						
C	101÷125	117	101–104.120.124.106÷110.CT101÷CT104.CV101÷CV104.113.115.125.122					121.119.116.112.111.114.118.105							
	126÷214		134÷139.131.127.126		157.158.129.140÷142	133.128.132.130		146.159.149.143.144.156.147.145.154	152	148	214	151.153	209	203	212 213 206 207 208 201	210
R	101÷117		101 107 103 114		104 102	113.115.117.116.109.105.112.111.106		108							
	118÷213	129	119		118	120÷128		150.145.130÷136.138.143.144		203 204	212 207. 208	206		201	202 213 205

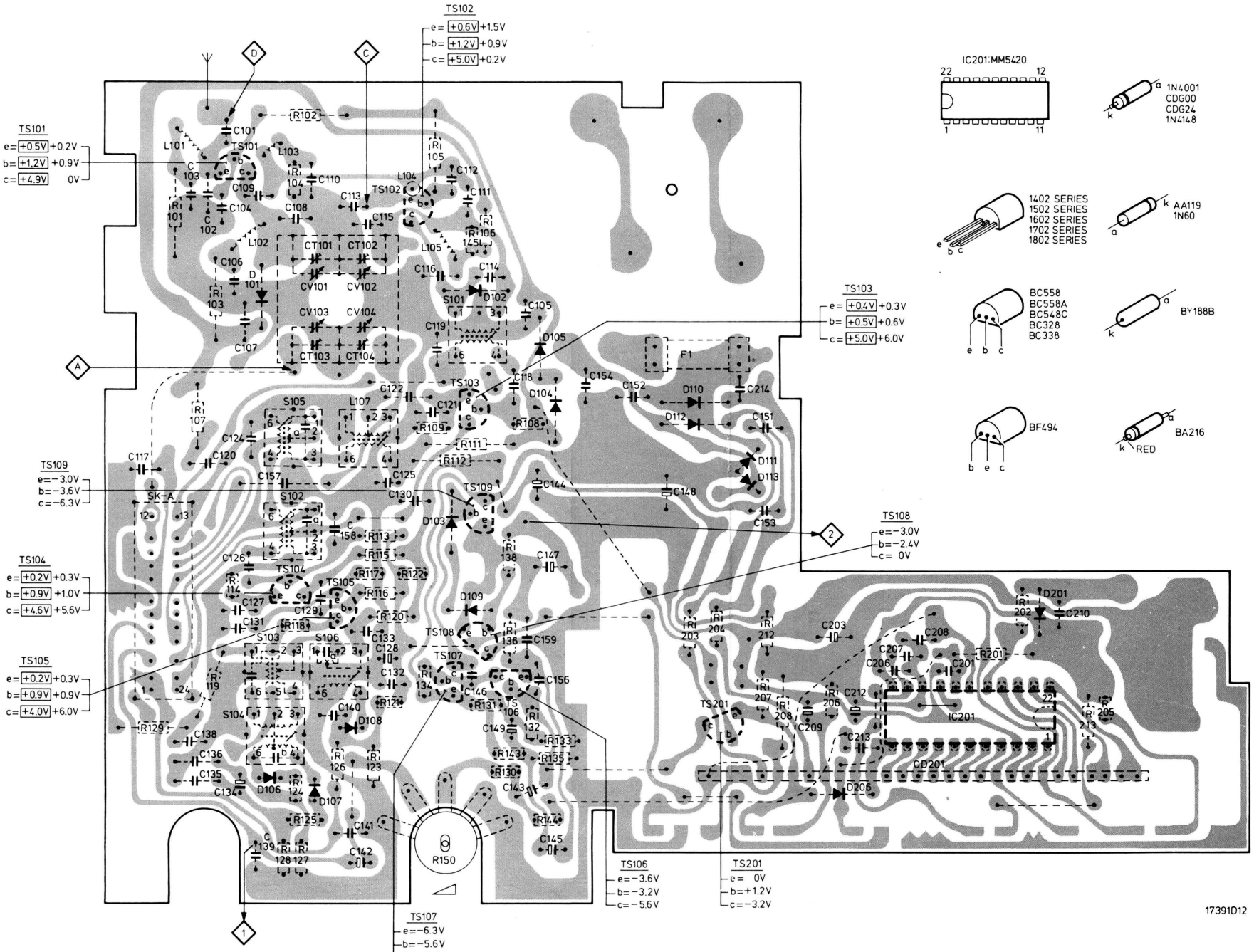

MISC.		SK-F SK-E D201 SK-D SK-C IC201 CD201 D206 SK-B TS201.D110–D113.F1 D104 D105.TS106÷TS109.D109.TS103.D102 D103.TS102.D108.TS105 D107 TS104 D106 D101 TS101 SK-A SP101 SK-G
S-L		S101 L105 L104 L107 S102÷S106 L103 L102 L101 L108 L106
C	101÷125	105.118.114.111.112.116.119.121 122.125.115.113.CV101÷CV104.CT101÷CT104.106÷110.124.120.101÷104.117
C	126÷214	210 201 208 207 206 213 212 203 209 153.151 214 148 152 154.145.147.156.144.143.149.159.146 130.132 128 133 140÷142.129.158.157 126.127.131.134–139
R	101÷117	108 106 111 112 105.109.116.117.115.113 102.104 114 103 107 101
R	118÷213	205 213 202 201 206 208.207.212 204 203 144.143.138.130÷136.145.150 120÷128 118 119 129

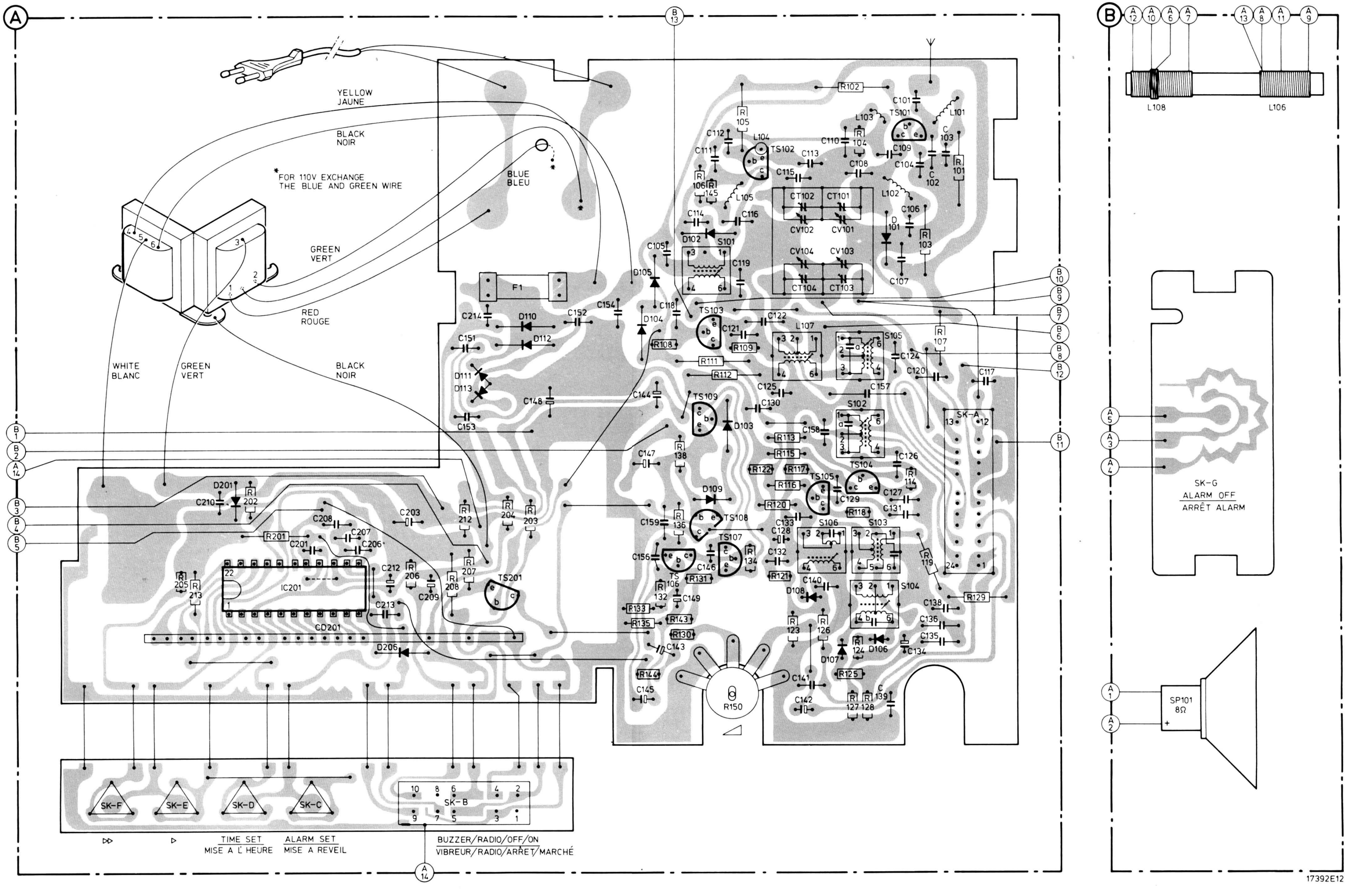

17392E12
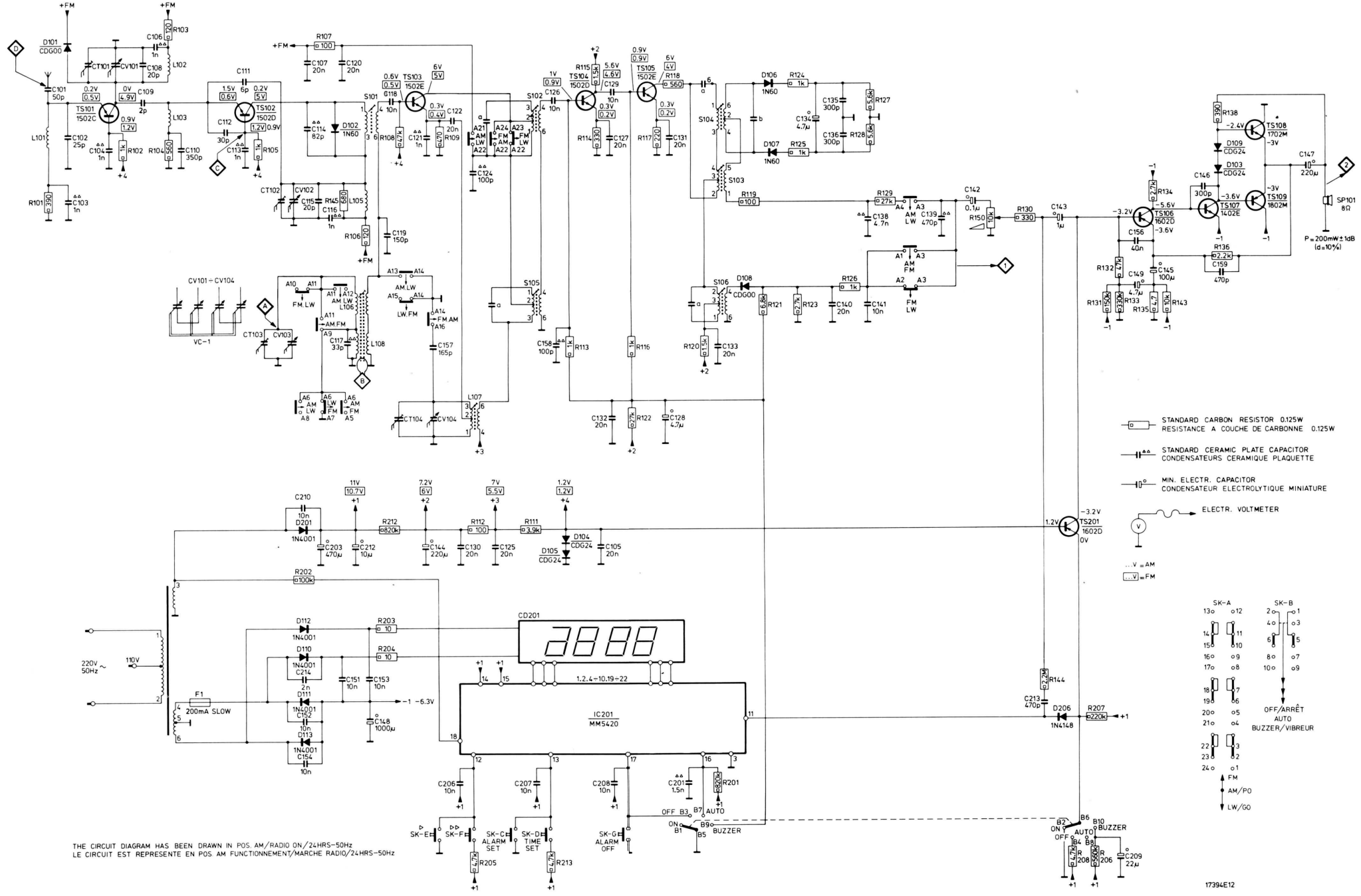
MISC.	D101	TS101	F1 VC1	TS102	D201.D110-D113.D102	TS103	D105.D104.TS104.CD201.IC201.TS105	D106-D108	D206.TS201	TS106	TS107.D109.D103.TS108.TS109	SP101
L+T	L101	L102.L103	L105.S101.L106.L108	L107	S102.S105	S104.S103.S106						
C 101-140	101-104	CT101.CV101	109.108.106	110	111-113.CT102.CV102.CT103.CV103.107	114÷120	CT104.CV104.121-125.130	126	105.127.132.129	128.131	133	134-136.140	138	139				
C 141-214					214.210.203	151-154.212.148.157	144	206	207	158	208	201	141	142	213.143	156.209.149.145	146	159	147
R	101	102	103.104	105	202	107 145	106.203.204.212	108.109	205.112.111	213	113-118.122	120.201.119	121	123-129	R150	130	144 206-208	131-135.143	138.136